Amana LG8519L2 (BOM: PLG8519L2) 18 - POWER CORDS

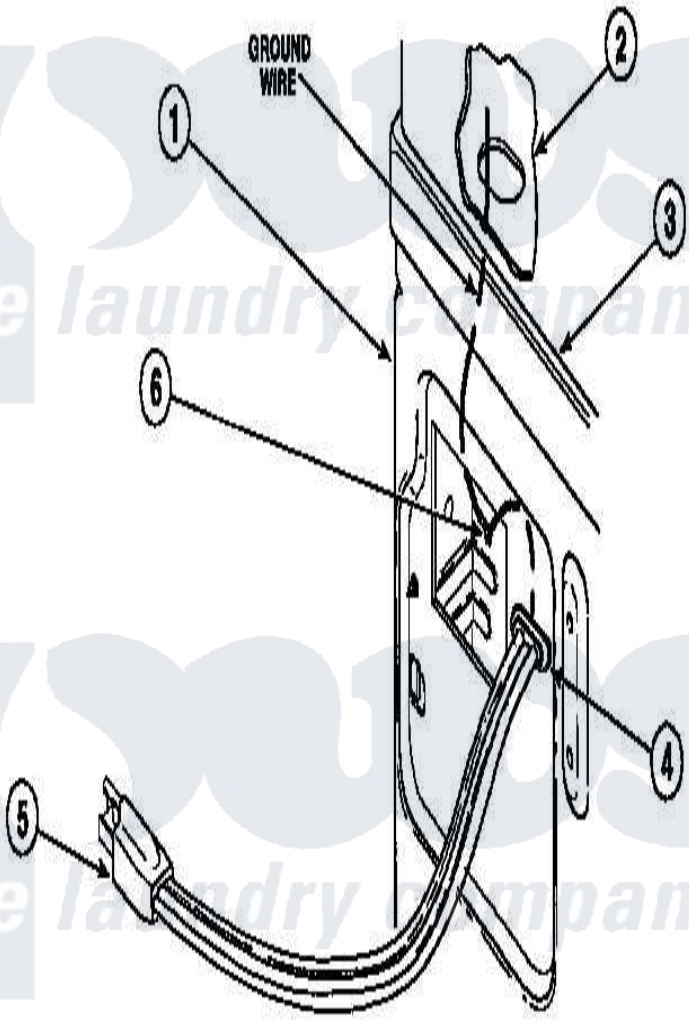

Amana Residential Amana LG8519L2 (BOM: PLG8519L2) Dryer Parts Parts Diagram 18 - POWER CORDS
Click on the part number to view part

Item	Original Part Number	Replaced By	Status	Part Description
1	500001P		Not Available	(ADD LETTER BEFORE ``P`` IN PART
2	500343		Not Available	PANEL,BACK(HOME HOOD)
3	500085P		Not Available	(ADD LETTER L-L, W-W TO PART N
4	21903	211881		Grommet, Cord Part Not Used-Gas Models Only
5	Y56222	27001142		Cord, Power
6	502120	489069		Xxscrew, 10-12 X 1/2
"	20530			Screw, 10-24 x 3/8 Hex