Amana LGC50AW (BOM: PLGC50AW) 03 - DOOR AND FRONT, ACCESS, AND TOP PANELS

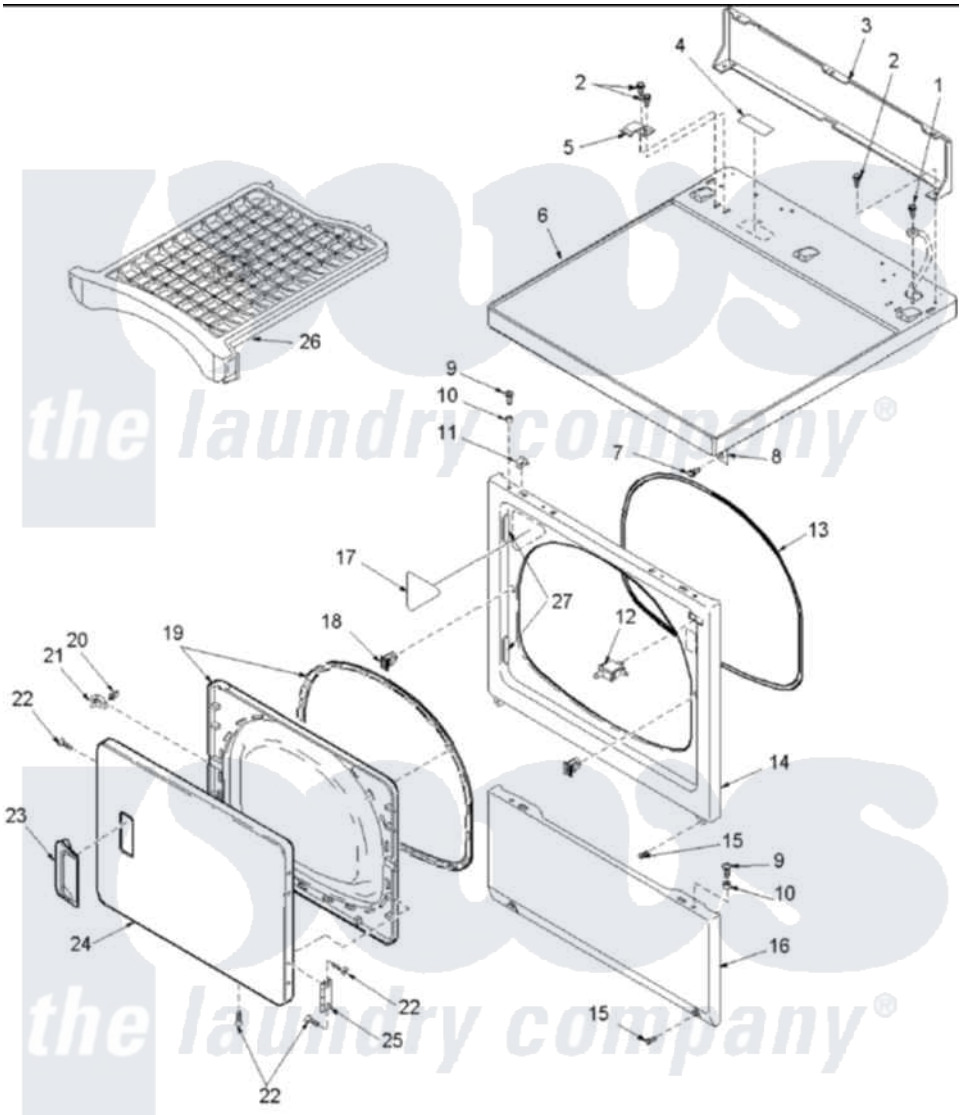

Amana Residential Amana LGC50AW (BOM: PLGC50AW) Dryer Parts Parts Diagram 03 - DOOR AND FRONT, ACCESS, AND TOP PANELS
Click on the part number to view part

Item	Original Part Number	Replaced By	Status	Part Description
3	500343		Not Available	PANEL,BACK(HOME HOOD)
4	24903R4		Not Available	STICKER
5	Y503876			Clip, Hold Down
6	500085W	37001027		Panel, Top
8	500084	40130801		Bracket, Top Mount
9	32671	Y014874		Screw, Idler Arm And Sleeve
10	505187			Locator, Panel
11	56080	22001650		Fastener, Spring
12	Y504570	W10169313		Switch-Dor
13	504005	511056		Seal Front Panel
14	503639W	503656WP		Panel, Front
16	503648W	40045301WP		Panel, Access
17	500281		Not Available	STICKER
18	54660	LA-1003		Door Catch Kit
19	503643W	37001028		Seal And Liner, Assembly

20	500039	510181	Strike Doormetal
21	500223	40116201	Bracket, Door Strike
23	503646W	R9800012	Pull, Door
24	503642W	12002136	Door Handle
25	Y503676		Hinge, Door And Top
26	Y504105	Y504105A	Rack-Dry
27	503126		Plug, Hinge Hole

the laundry company®
the laundry company®
the laundry company®