Amana LGD451 (BOM: P7762234W W) 05 - LOADING DOOR

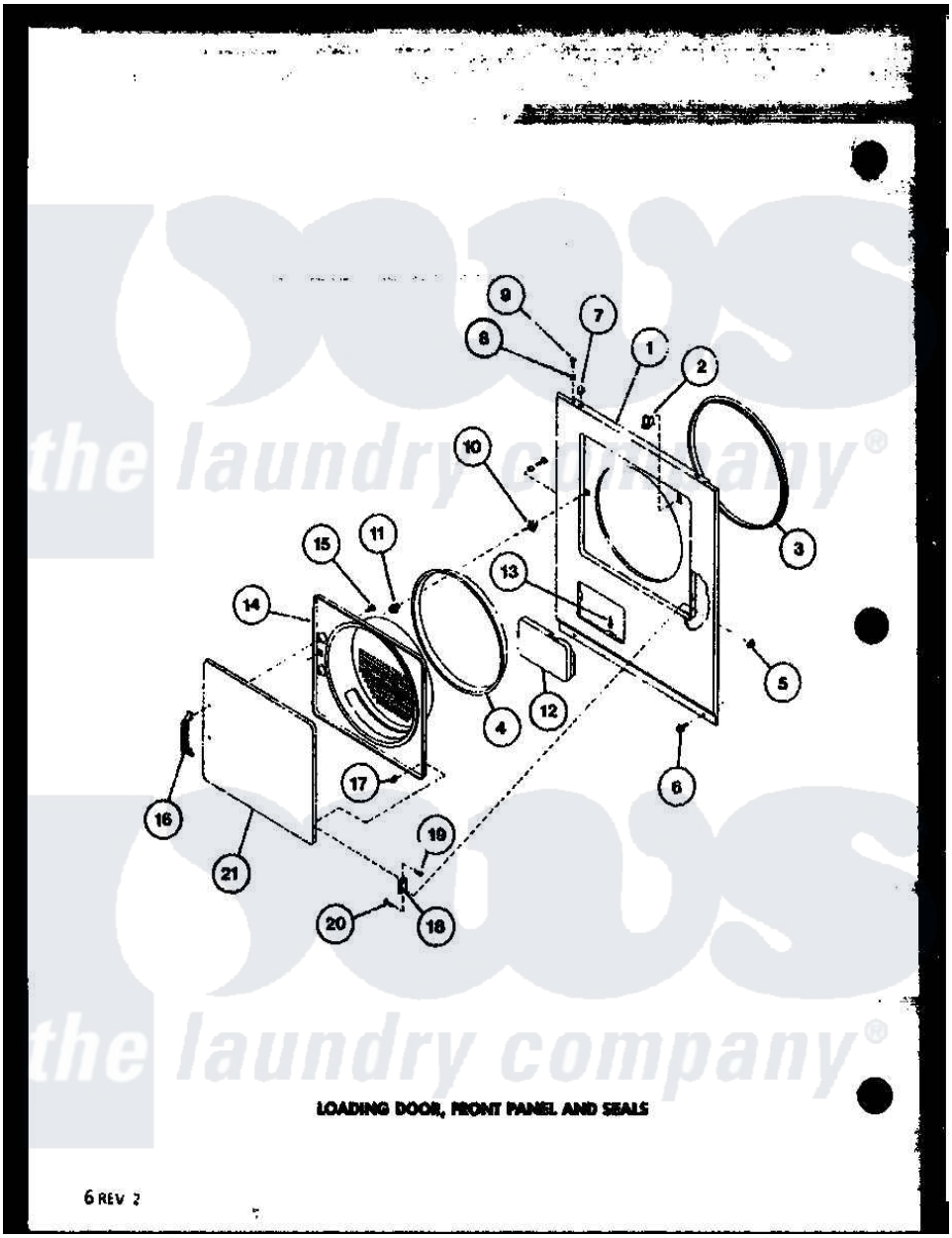

Amana Residential Amana LGD451 (BOM: P7762234W W) Dryer Parts Parts Diagram 05 - LOADING DOOR
Click on the part number to view part

Item	Original Part Number	Replaced By	Status	Part Description
1	R0603120		Not Available	PANEL, FRONT W
"	R0603064		Not Available	FRONT PANEL ALMOND
2	R0602515	W10169313		Switch-Dor
3	R0606521	Y61380		Seal, Front Panel
4	R0606522	61379P		Door Seal
5	R0601017	488130		Nut
6	R0600017		Not Available	SCREW
7	R0601520	22001650		Fastener, Spring
8	R0603524	505187		Locator, Panel
9	R0600031	Y014874		Screw, Idler Arm And Sleeve
10	R0601523	306436		Door Latch Kit--W
11	R0601524	LA-1003		Door Catch Kit
12	R0603066		Not Available	DOOR,ACCESS
"	R0603121		Not Available	DOOR, ACCESS
13	R0601525	56534		Barrel, Support
14	R0603150		Not Available	DOOR LINER A

"	R0603151		Not Available	DOOR LINER W
15	R0600036	489464		Screw
16	R0605680	61925		Pull Door Commercial Black
17	R0601018	23407		Nut, Speed-8A Tinn C15
18	R0605551	56045		Hinge
19	R0600035	500226		Screw, 8b-16 x 5/8 Tap
20	R0600007	22649		Screw, 8-32 X 13/32 Fl
21	R0603060		Not Available	OTR DOOR PAN ALMOND
"	R0603122		Not Available	PANEL, OUTER DOOR W

the laundry company®
the laundry company®
the laundry company®