Amana LGD451 (BOM: P7762234W W) 09 - REAR BULKHEAD

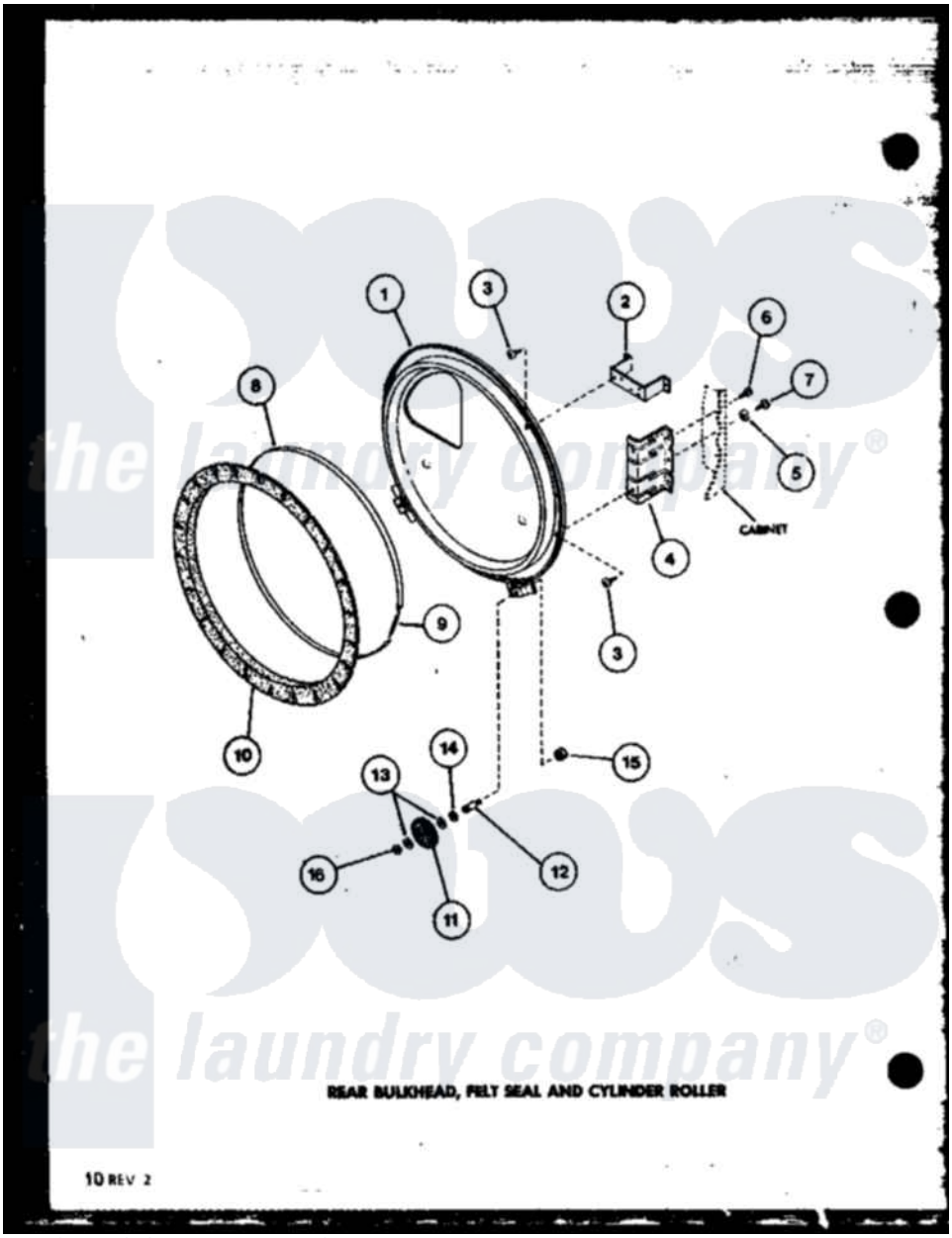

Amana Residential Amana LGD451 (BOM: P7762234W W) Dryer Parts Parts Diagram 09 - REAR BULKHEAD
Click on the part number to view part

Item	Original Part Number	Replaced By	Status	Part Description
1	R0603117		Not Available	ASSY,REAR BULKHEAD
2	R0605709	60823P		Bracket, Terminal Block
3	R0600041		Not Available	SCREW
4	R0605557		Not Available	BRACKET
5	R0600527		Not Available	WASHER
6	R0600017		Not Available	SCREW
7	R0600040		Not Available	SCREW
8	R0605555		Not Available	STRAP, SEAL
9	R0605554	52310		Spring
10	R0604508	56088		Assembly, Seal
11	R0605559	62649P		Roller- CY
12	R0605560	56461		Shaft
13	R0600526	52549		Washer, 501 ID X3/4 Odx
14	R0600528		Not Available	THRUST WASHER
15	R0601009	358160		Nut
16	R0601527	23748		Ring, Retaining