Amana LGS10AW (BOM: PLGS10AW) 03 - Door and Front, Access, and Top Panels

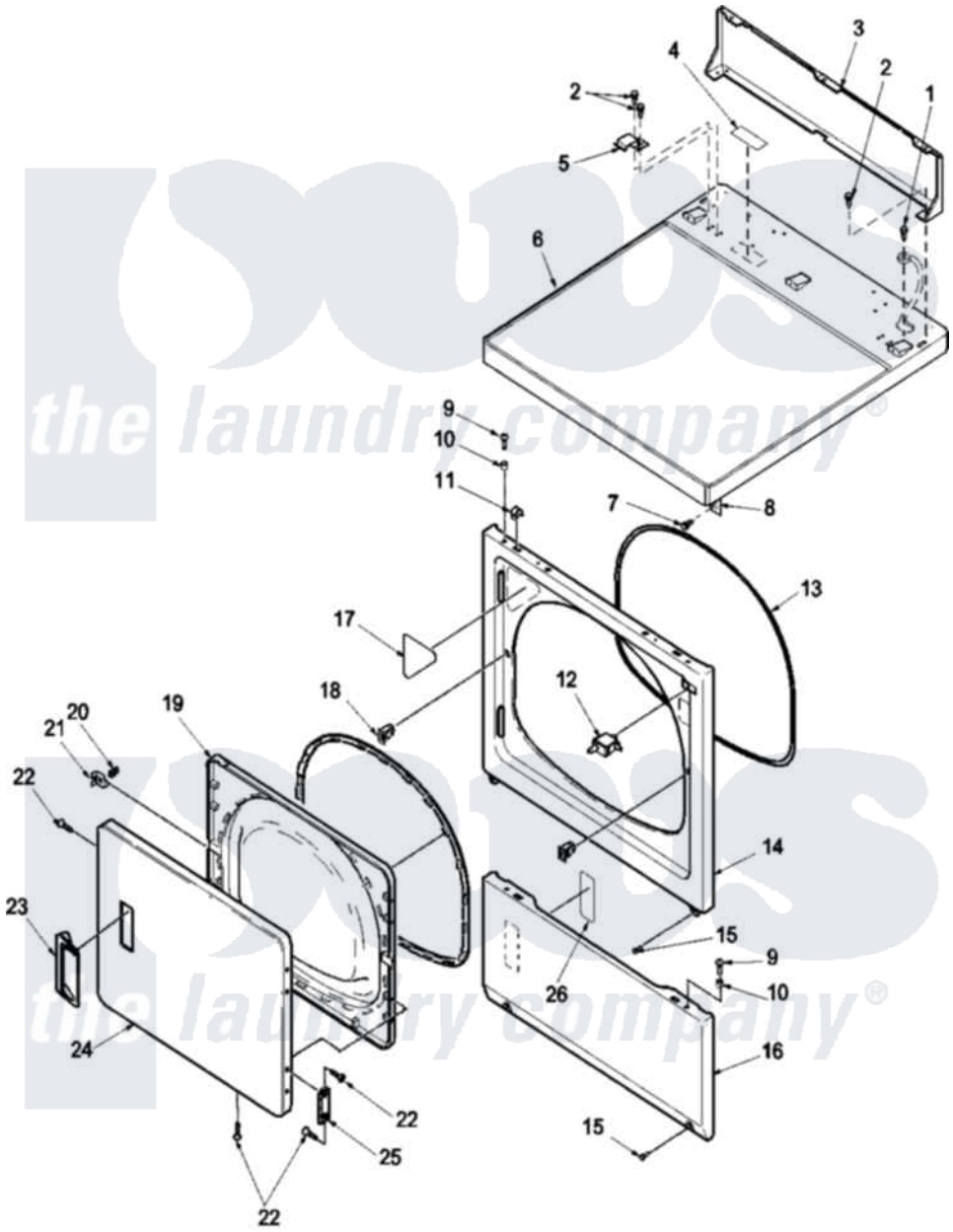

Amana Residential Amana LGS10AW (BOM: PLGS10AW) Washer Parts Parts Diagram 03 - Door and Front, Access, and Top Panels

Click on the part number to view part

Item	Original Part Number	Replaced By	Status	Part Description
1	503688			Screw, 10B-16 X .34 I
2	501086	90767		Screw, 8A X 3/8 HeX Washer Head Tapping
3	500343		Not Available	PANEL,BACK(HOME HOOD)
4	24903		Not Available	STICKER,DISCONNECT POW
5	501241	Y503876		Clip, Hold Down
6	500085WP	37001027		Panel, Top
7	503661	27001200		Screw
8	500084	40130801		Bracket, Top Mount
9	32671	Y014874		Screw, Idler Arm And Sleeve
10	56079	505187		Locator, Panel
11	56080	22001650		Fastener, Spring
12	Y504570	W10169313		Switch-Dor
13	504005	511056		Seal Front Panel

14	503656W	503656WP		Panel, Front
15	503661	27001200		Screw
16	503796W	40045301WP		Panel, Access
17	500281		Not Available	STICKER
18	54660	LA-1003		Door Catch Kit
19	503643W	37001028		Seal And Liner, Assembly
20	500039	510181		Strike Doormetal
21	500223	40116201		Bracket, Door Strike
22	505050	500226		Screw, 8b-16 x 5/8 Tap
23	503646W	R9800012		Pull, Door
24	503654W	12002136		Door Handle
25	Y503676			Hinge, Door And Top
26	500670		Not Available	STICKER NG OR MIXED GA

the laundry company®
the laundry company®
the laundry company®