Amana LGS34AW (BOM: PLGS34AW) 01 - Cabinet and Base

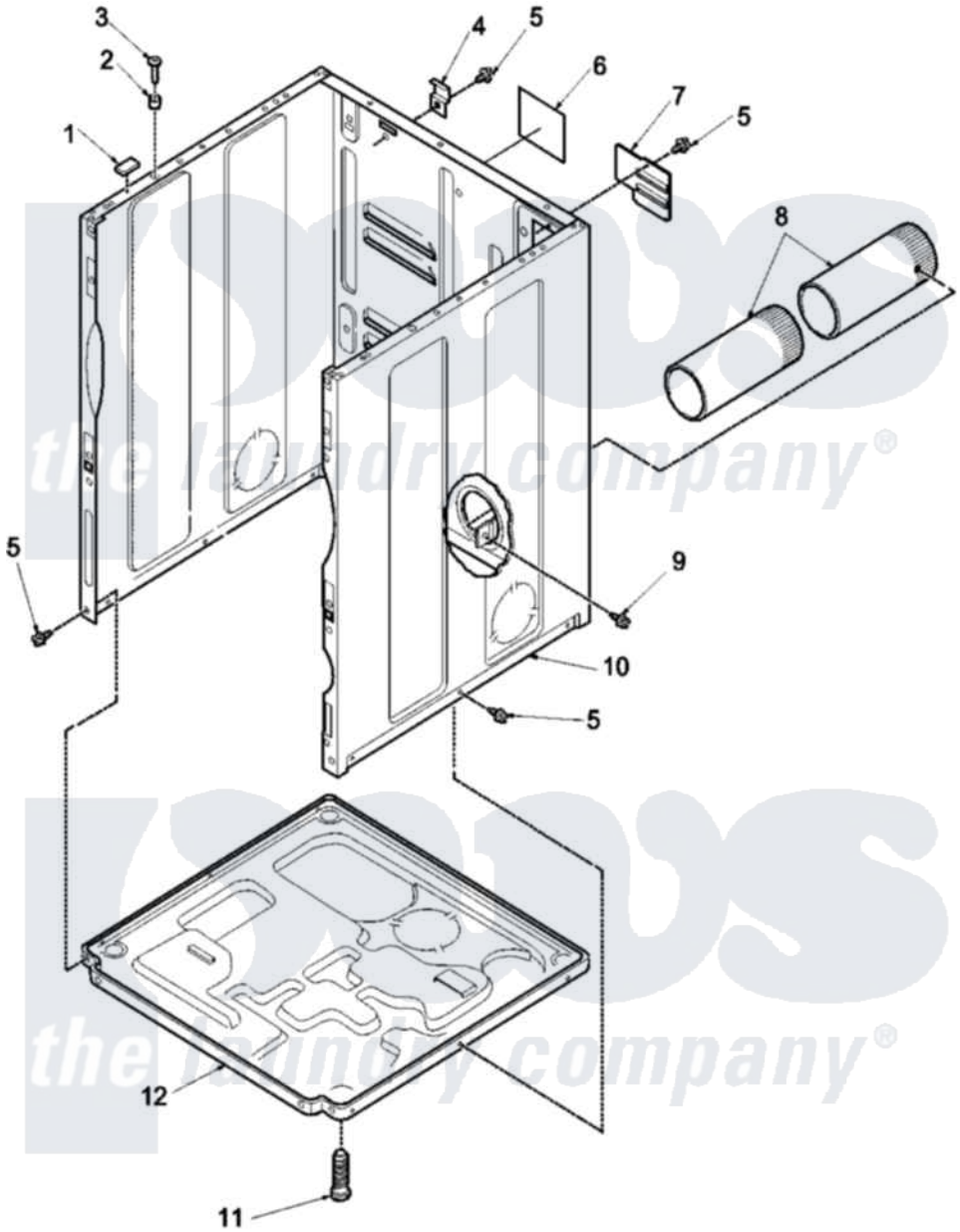

Amana Residential Amana LGS34AW (BOM: PLGS34AW) Washer Parts Parts Diagram 01 - Cabinet and Base
Click on the part number to view part

Item	Original Part Number	Replaced By	Status	Part Description
1	Y56128			Pad, Bumper
2	56079	505187		Locator, Panel
3	32671	Y014874		Screw, Idler Arm And Sleeve
4	500003			Hinge, Top
5	503661	27001200		Screw
6	500495		Not Available	(GAS MODELS)
7	500114	510903		Plate Access Panel
8	500064	505518		Duct, Exhaust
9	503688			Screw, 10B-16 X .34 I
10	500001WP	37001284		Cabinet As Pack
11	Y500101			Leg, Leveling
12	500070			Base, Dryer
NI	521P3			Kit, Flex Vent-Display
"	528P3			Directional Exhaust Kit
"	Y56222	27001142		Cord, Power