Amana LW2502L (BOM: P1118409W L) 10 - PUMP ASSY

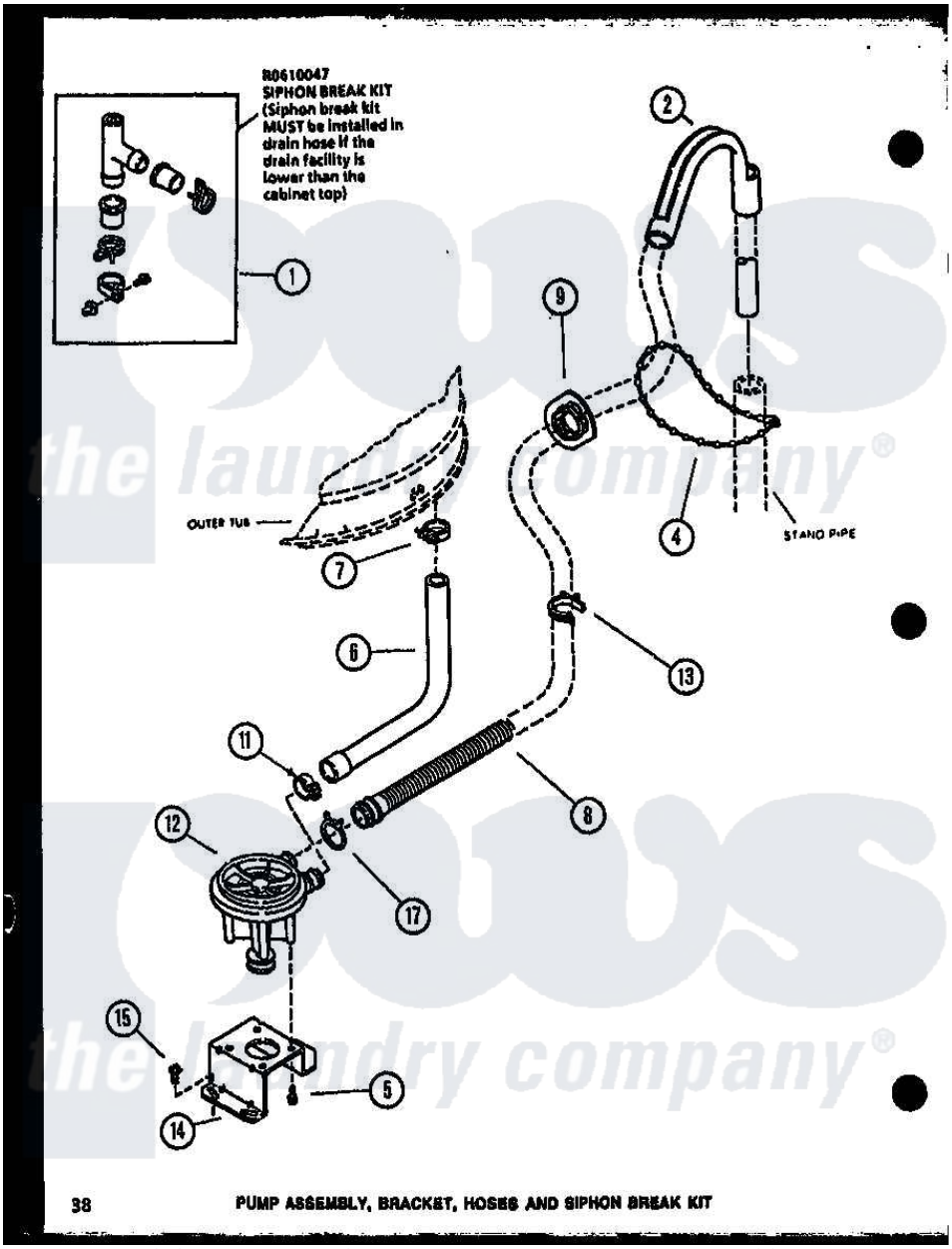

Amana Residential Amana LW2502L (BOM: P1118409W L) Washer Parts Parts Diagram 10 - PUMP ASSY

Click on the part number to view part

Item	Original Part Number	Replaced By	Status	Part Description
1	R0610047	76660		Break-Sphn
2	R0603615	22003814		Retainer, Drain Hose
4	R0603616	8539404		Tie-Wire
5	R0600109	31098		Screw, 10-10 5/8 Unslot
6	R0606514		Not Available	HOSE
7	R0601549	285655		Clamp, Hose
8	R0606558	39953		Hose- Drai
9	R0603617	32219		Relief, Strain
11	R0601516	285655		Clamp, Hose
12	R0610503	31969		Assembly, Pump NA
13	R0601550		Not Available	CLAMP HOSE RETAINER
14	R0605524	27105		Bracket, Pump Mounting
15	R0600098	27001200		Screw
17	R0601551	285655		Clamp, Hose