Amana LW4303W (BOM: P1163303W W) 01 - 34526 TRANSMISSION ASSY

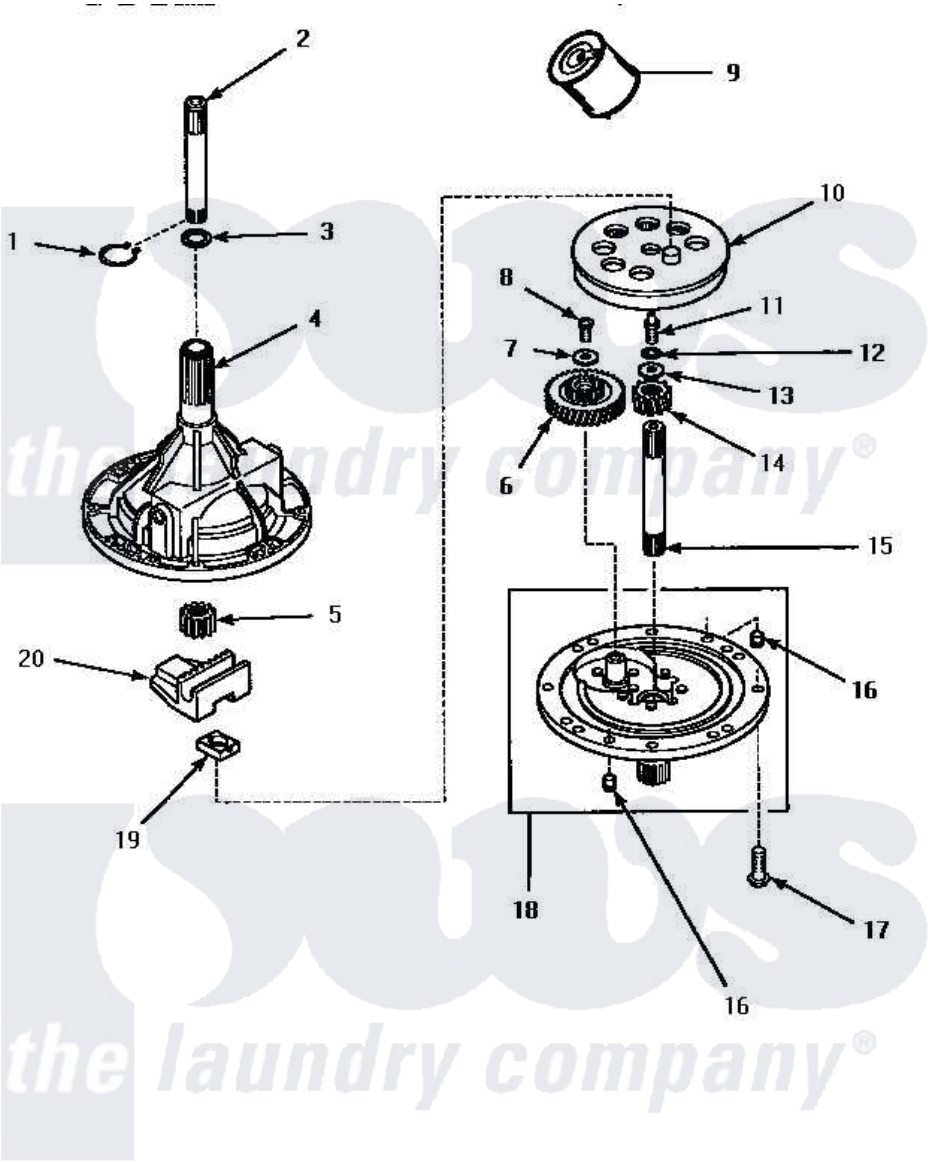

34526 TRANSMISSION ASSEMBLY

Amana Residential Amana LW4303W (BOM: P1163303W W) Washer Parts Parts Diagram 01 - 34526 TRANSMISSION ASSY

Click on the part number to view part

Item	Original Part Number	Replaced By	Status	Part Description
1	27197			Ring, Retaining
2	Y36570			Shaft, Output
3	35092			Washer, 3628id X 1.00 X .056
4	33223		Not Available	ASSY,TRANSMISSION CASE
5	27003			Pinion, Agitator
6	29161			Gear, Reduction
7	29260		Not Available	WASHER
8	29273			Screw, 1/4-20 X 3/8
9	27243P			Oil, CW Transmission F-
10	26577			Assembly, Gear And Stud
11	27030		Not Available	SCREW,1/4-20 SPECIAL
12	21456			Lockwasher, 1/4 Intshkp
13	26509	40041501		Washer
14	Y29160			Pinion, Drive
15	34853			Shaft, Input
16	27172			Pin, Dowel

17	32814		Not Available	SCREW,1/4-20X7/8 SERRA
18	34854	38290		Assembly, Cover
19	26493			Slide
20	Y31526			Rack
NI	28434P		Not Available	LOCTITE

the laundry company®
the laundry company®
the laundry company®