Amana LW6001W2 (BOM: PLW6001W2A) 10 - INLET/FILL HOSE/MIXING VLV & MTG BRKT

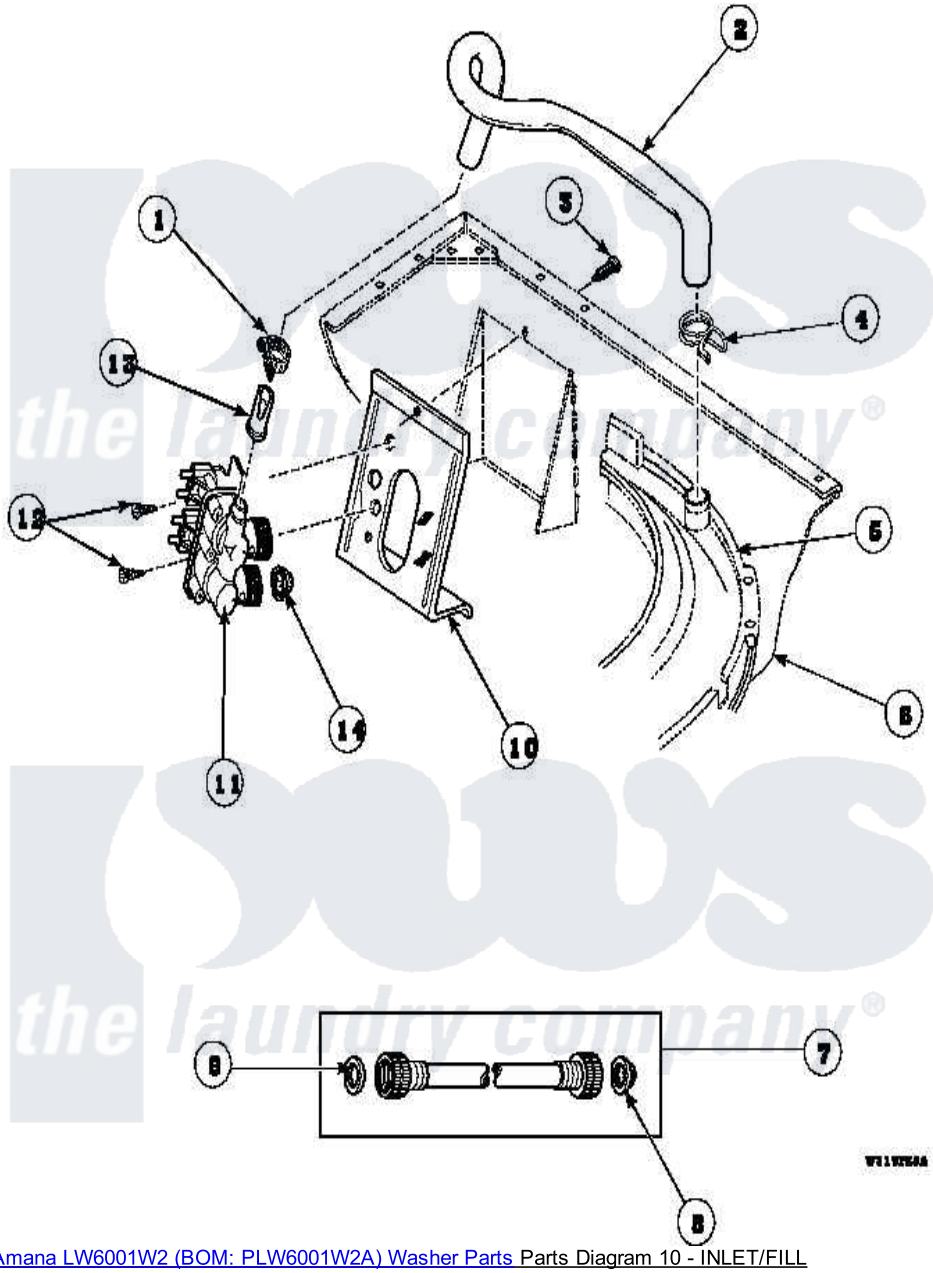

Amana Residential Amana LW6001W2 (BOM: PLW6001W2A) Washer Parts Parts Diagram 10 - INLET/FILL HOSE/MIXING VLV & MTG BRKT
Click on the part number to view part

Item	Original Part Number	Replaced By	Status	Part Description
1	36801	596669		Clamp, Manifold
2	35874	38155		Hose, Mix Valve To TU
3	33562	27001200		Screw
4	29210			Hose Clamp
5	36025P			Assembly, Tub Coverand Gasket
6	34475_P		Not Available	CABINET
7	20617		Not Available	HOSE, INLET (8 FT)
"	28330P	202860		Inlet Hose Assembly
"	20618	21001467		Hose- 10`
8	28605	22002960		Strainer, Washer Inlet
9	20290	Y013783		Washer, Inlet Hose
10	34972	39407		Bracket, Valve
11	34963	34963P		Valve Mixing Package
12	501086	90767		Screw, 8A X 3/8 HeX Washer

12	501086	90767	Head Tapping
13	34500	22001900	Preventer, Back Flow
14	24122	22002960	Strainer, Washer Inlet

the laundry company®

the laundry company®

the laundry company®