Amana LW6163WM (BOM: PLW6163WM A) 12 - OUTER TUB, COVER & PRESSURE HOSE

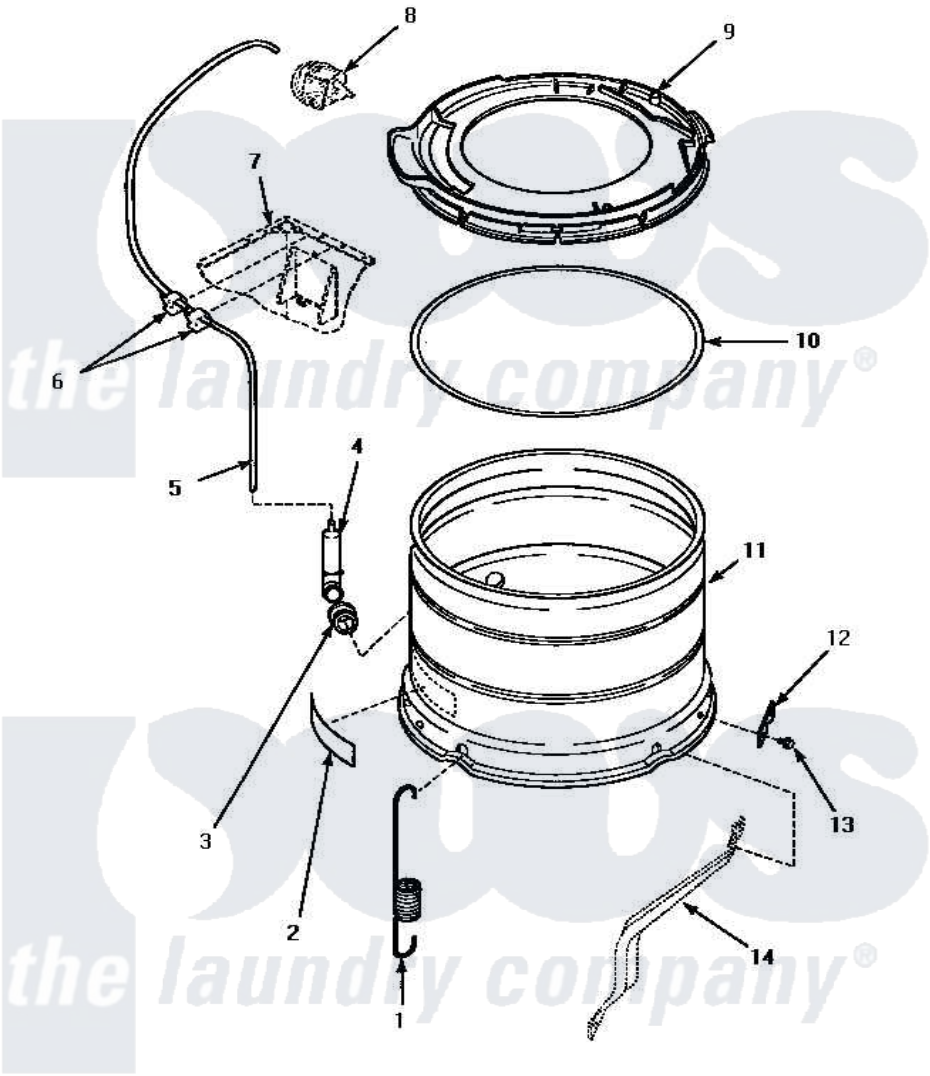

OUTER TUB, COVER AND PRESSURE HOSE

Amana Residential Amana LW6163WM (BOM: PLW6163WM A) Washer Parts Parts Diagram 12 - OUTER TUB, COVER & PRESSURE HOSE
Click on the part number to view part

Item	Original Part Number	Replaced By	Status	Part Description
1	35948			Spring, Leg-Large Tub
2	500049		Not Available	STICKER
3	29175	40037801		Grommet
4	30907	40008501		Assembly, Pressure Bulb
5	29213	39125		Tubing 31
6	21036			Clip, Cable
7	Y00000000		Not Available	SEE NOTE CABINET ASSEMBLY -- (SEE FRONT PANEL PAGE)
8	Y00000000		Not Available	SEE NOTE PRESSURE SWITCH -- (SEE GRAPHIC PANEL PAGE)
9	36025P			Assembly, Tub Coverand Gasket
10	32857			Gasket, Tub Cover Small
11	34438P			Assembly, Outer Tub
12	27926			Plate, Leg .063

13	35369	40128701		Screw, 5/16-18 X .50
14	Y00000000		Not Available	SEE NOTE SUPPORT LEG -- (SEE BEARING HOUSING PAGE)

the laundry company®

the laundry company®

the laundry company®