Amana LW6601W2 (BOM: PLW6601W2 B) 07 - DRAIN HOSE AND SIPHON BREAK

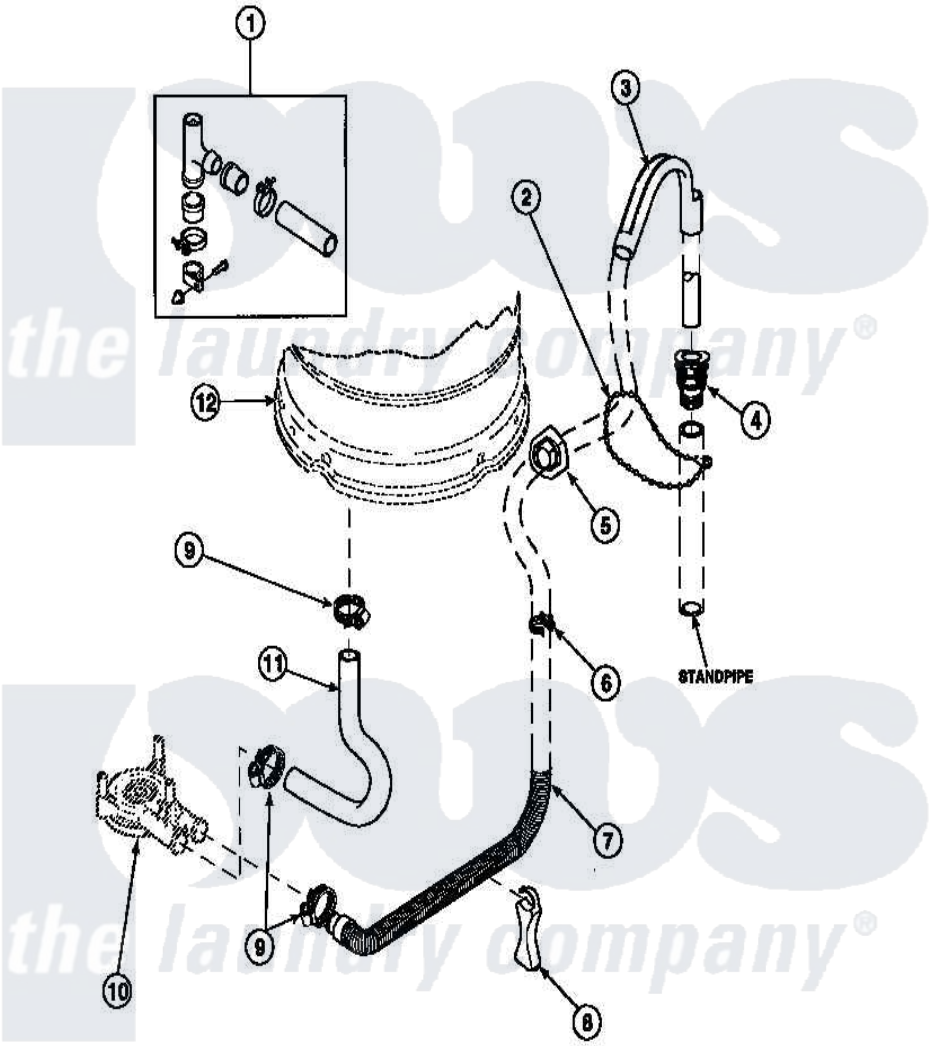

Amana Residential Amana LW6601W2 (BOM: PLW6601W2 B) Washer Parts Parts Diagram 07 - DRAIN HOSE AND SIPHON BREAK
Click on the part number to view part

Item	Original Part Number	Replaced By	Status	Part Description
1	562P3	76660		Break-Sphn
2	33489	8539404		Tie-Wire
3	33615	22003814		Retainer, Drain Hose
4	36878	40008101		Adapter, Standpipe
5	32219			Relief, Strain
6	36014			Clip, Retainer-Hose
7	37245	40053901		Hose, Drain
8	36522			Hose Support
"	35487			Support, Hose
9	36802	285655		Clamp, Hose
10	36863P	27001233		Pump
11	35752			Hose, Tub To Pump-Ddp
12	34439P			Outer Tub