Amana LW8201W2 (BOM: PLW8201W2B) 02 - AGITATOR/DRIVE BELL/SEAL KIT/TUB & HUB

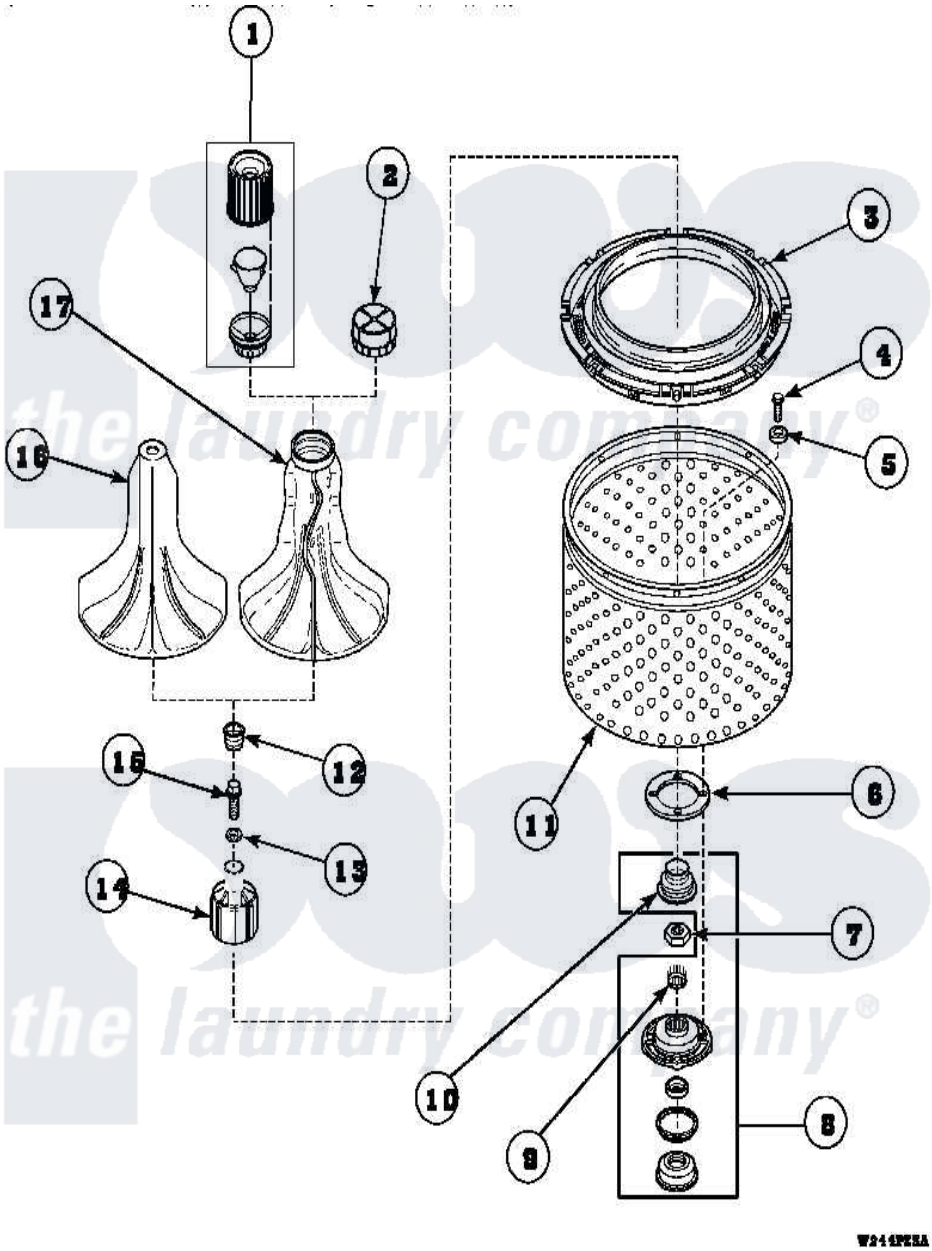

Amana Residential Amana LW8201W2 (BOM: PLW8201W2B) Washer Parts Parts Diagram 02 - AGITATOR/DRIVE BELL/SEAL KIT/TUB & HUB
Click on the part number to view part

Item	Original Part Number	Replaced By	Status	Part Description
1	36542	40002101W		Assembly, Fabric Softner
2	36515			Cap, Agitator
3	35035			Guard, Clothes
4	27202	W10116787		Screw
5	28094			Gasket
6	27125	39122		Gasket, Washtub
7	Y29220	40016301		Nut, Lock
8	495P3	R9900552		Hub And Seal
9	29728	40008301		Insert, Spline
10	36425	40016101		Seal, Bell Drive
11	34521P			Assembly, Tub
12	36511	40008401		Plug, Bell
13	36472			O-Ring
14	36443P	R9900189		Kit, Drive Bell And Seal
15	34288	40065102		Screw, Shoulder 1/4

16	33513		Agitator, Short-Coin
17	33174	40000501W	Agitator, Flex Vane

the laundry company®

the laundry company®

the laundry company®