Amana LW8413W2 (BOM: PLW8413W2 A) 20 - MOTOR, MTG BRKT, BELT, PUMP & IDLER ASSY

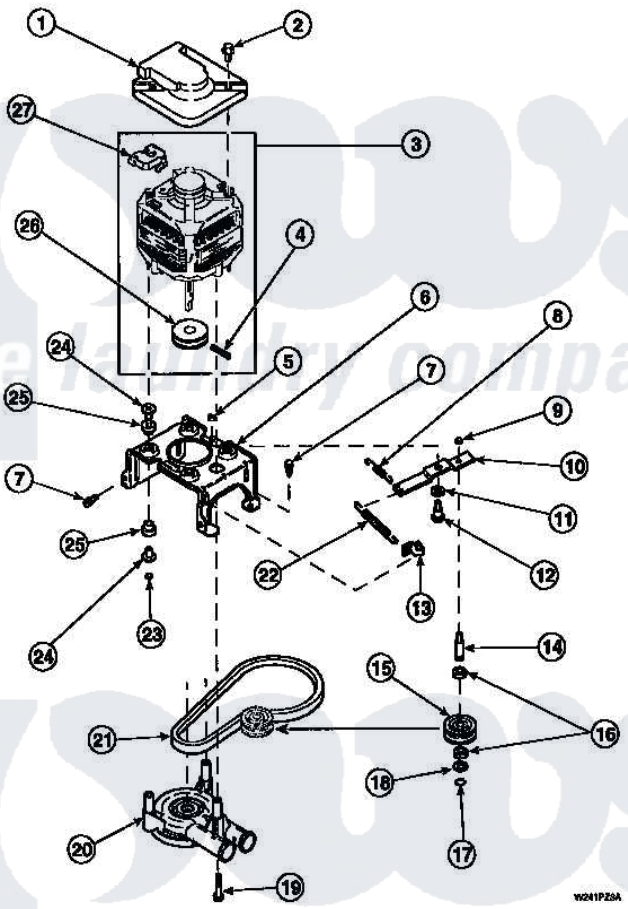

Amana Residential Amana LW8413W2 (BOM: PLW8413W2 A) Washer Parts Parts Diagram 20 - MOTOR, MTG BRKT, BELT, PUMP & IDLER ASSY
Click on the part number to view part

Item	Original Part Number	Replaced By	Status	Part Description
1	34754	40112301		Shield, Motor
2	36639	4312464		Screw
3	34571P	27001215		Motor W/Pulley
4	23750			Pin, Roll
5	52566	27001225		Nut, Jam Mid Lock 1/4-20
6	34890		Not Available	BRACKET,MOTOR MOUNT
"	37415P			Kit, Motor Brkt
"	37415	37415P		Kit, Motor Brkt
7	Y31645	27001200		Screw
8	30620		Not Available	SPRING,IDLER LEVER HEL
9	28803	2221070		Clamp, Nylon
10	31054	40041002		Lever, Idler
"	37443	40041002		Lever, Idler
11	81392	40054701		Washer
12	27229	40038901		Screw, 1/4-20

13	28849			Clip, Spring
14	28802			Shaft, Idler
15	28800		Not Available	WHEEL,IDLER
16	Y29443			Washer, Felt
17	23748			Ring, Retaining
18	52549			Washer, 501 ID X3/4 Odx
19	Y34565	40063701		Screw, 10-16 x 1.75
20	36863P	27001233		Pump
21	28808			Belt, Agitate And Spin
22	37366			Spring, Idler
"	37606			Spring, Idler Lever
23	35423	3400029		Nut, Adapter Plate
24	34791			Post, Mount-Motor
25	34788			Mount, Motor
26	27171		Not Available	PULLEY,MOTOR
27	35632		Not Available	SWITCH, MOTOR

the laundry company®
the laundry company®