Amana LWA40AW (BOM: PLWA40AW) 01 - AGITATOR, DRIVE BELL, WASHTUB AND HUB

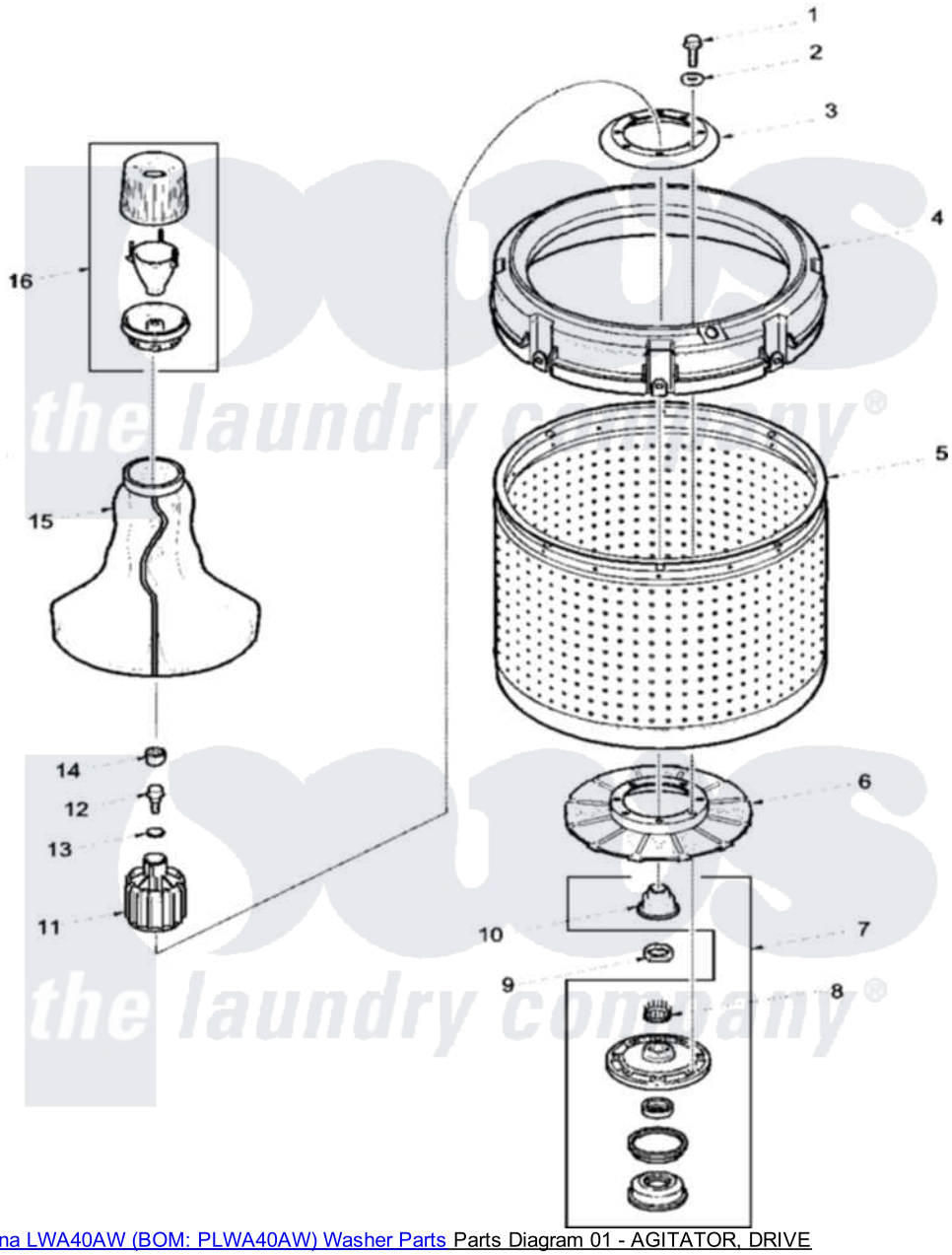

Amana Residential Amana LWA40AW (BOM: PLWA40AW) Washer Parts Parts Diagram 01 - AGITATOR, DRIVE BELL, WASHTUB AND HUB
Click on the part number to view part

Item	Original Part Number	Replaced By	Status	Part Description
1	27202	W10116787		Screw
2	28094			Gasket
3	39113	R9900144		Kit- Wash
4	37411	27001052		Balance Ring
5	39386P		Not Available	WASTUB
6	39112	39371		Filter Lin
7	646P3	R9900552		Hub And Seal
8	29728	40008301		Insert, Spline
9	Y29220	40016301		Nut, Lock
10	36425	40016101		Seal, Bell Drive
11	36443P	R9900189		Kit, Drive Bell And Seal
12	34288	40065102		Screw, Shoulder 1/4
13	36472			O-Ring
14	36511	40008401		Plug, Bell
15	36507	40000501W		Agitator, Flex Vane

16	36542	40002101W	Assembly, Fabric Softner