Amana NA3612 04 - BRG HSG/BRAKE/PULLEY & PIVOT DOME

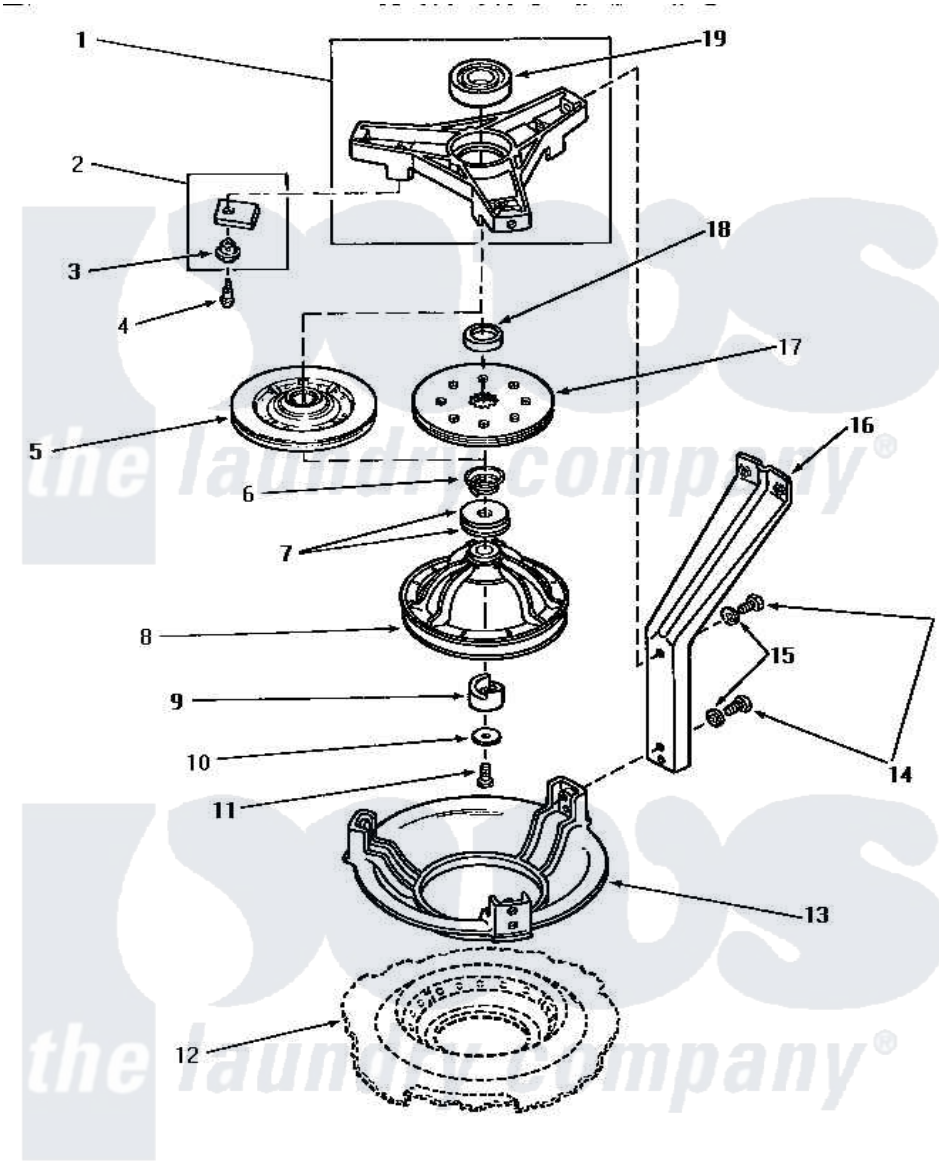

BEARING HOUSING, BRAKE, PULLEY AND PIVOT DOME

Amana Residential Amana NA3612 Washer Parts Parts Diagram 04 - BRG HSG/BRAKE/PULLEY & PIVOT DOME
Click on the part number to view part

Item	Original Part Number	Replaced By	Status	Part Description
1	28913	35746		AssembLy, Bearing Housing-L
2	348P3	R9900543		Pad-Brake
3	29993			Sleeve, Anti-Rotation
4	26547			Screw, 10-24 Shoulder
5	31961P	R9900474		Brake Assembly
6	33435			Spring, Conical
7	32651	40065701		Washer, 2 Odx.63 ID
8	30260	34232P		Kit-Pulley
9	27018			Helix
10	26509	40041501		Washer
11	27220	40063401		Screw, 1/4-20 x 5/8 Hex
12	Y00000000		Not Available	SEE NOTE BASE ASSEMBLY
13	27124		Not Available	DOME,PIVOT
14	30016	40128701		Screw, 5/16-18 X .50
15	04366			Lockwasher, 5/16intshkp
16	27090			Leg, Support

17	26556P	R9900474	Brake Assembly
18	27176		Spacer
19	28944	40004001	Bearing, Main

the laundry company®

the laundry company®

the laundry company®