Amana NA4520 09 - LINT FILTER, WASHTUB & HUB

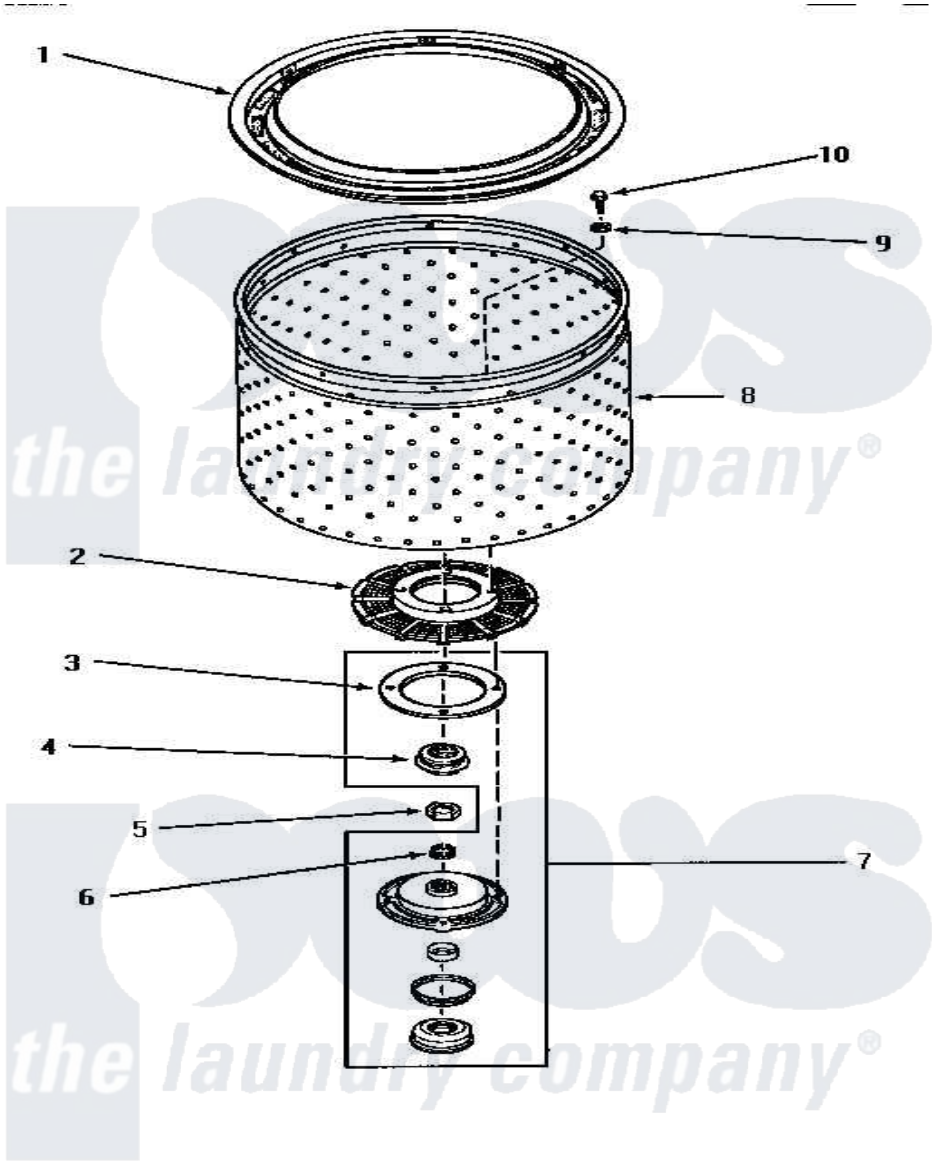

LINT FILTER, WASHTUB AND HUB

Amana Residential Amana NA4520 Washer Parts Parts Diagram 09 - LINT FILTER, WASHTUB & HUB
Click on the part number to view part

Item	Original Part Number	Replaced By	Status	Part Description
1	30944	33521		Filter Lint/Clothes Guard
2	32998	39371		Filter Lin
3	27125	39122		Gasket, Washtub
4	Y00000000		Not Available	SEE NOTE SEAL HEAD -- (INCLUDED WITH 442P3 KIT)
5	Y29220	40016301		Nut, Lock
6	29728	40008301		Insert, Spline
7	495P3	R9900552		Hub And Seal
8	28138		Not Available	WASHTUB, STAINLESS STEEL
"	29074	39252P		Wash Tub
"	33295	39252P		Wash Tub
"	33245			Washtub, Stainless Steel
9	28094			Gasket
10	27202	W10116787		Screw