Amana NAV5805AWW 06 - TRANSMISSION

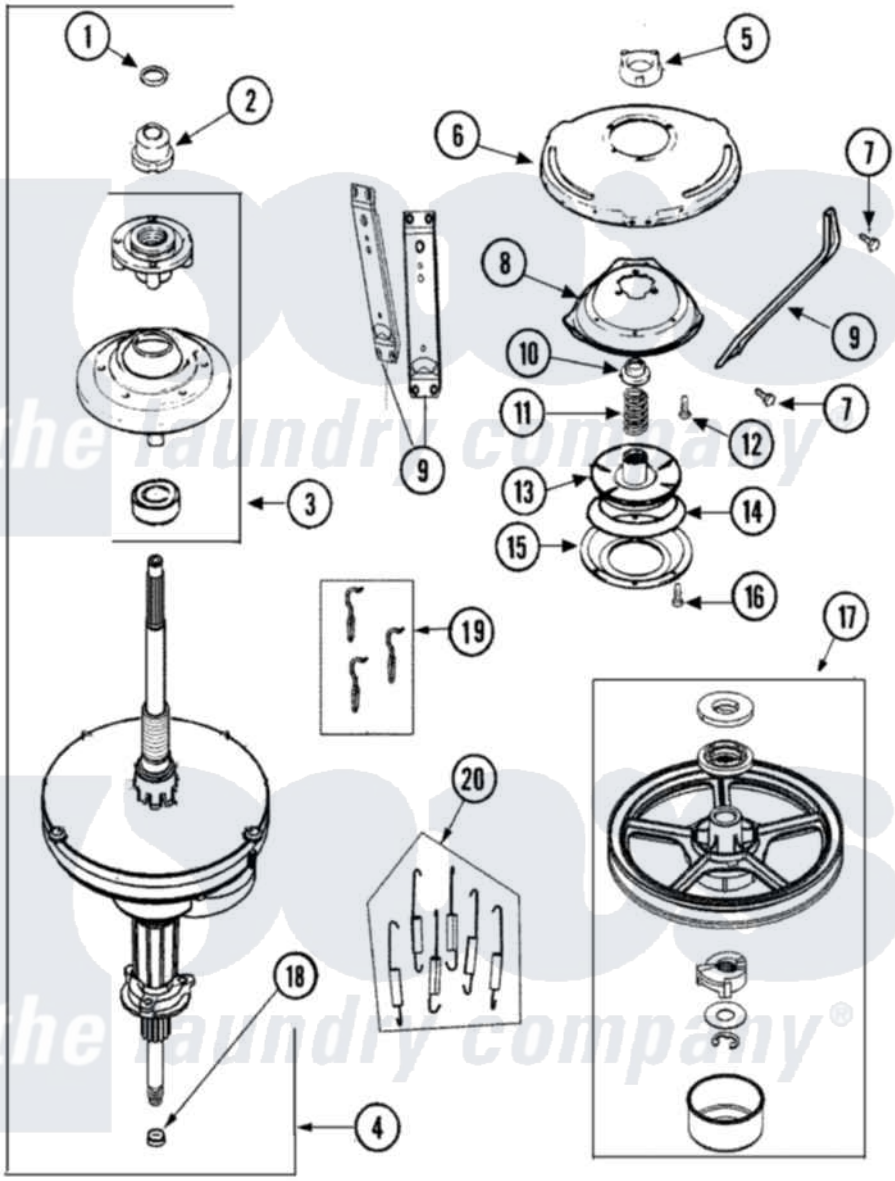

Amana Residential Amana NAV5805AWW Washer Parts Parts Diagram 06 - TRANSMISSION
Click on the part number to view part

Item	Original Part Number	Replaced By	Status	Part Description
1	25-7941			"O" Ring, Agtr Drive Shaft
2	21001533	35-5655-1		Seal
3	21001868	W10219156		Tub Seal
4	21001867	35-6615		Ht TranS S
5	21001511	12001562		Bearing Assembly
6	21001518			Support, Tub
7	21001858			Screw 5/16-18 x 1/2
8	21001163			Housing, Suspension
9	21001532			Brace, Tub
10	35-2017			Retainer, Brake Spring
11	21001910			Spring, Brake
12	21001509			Screw, High Performance Plastic
13	21002010	35-6714		Brake Roto
14	21002026			Snubber
15	35-6918			Stator, Brake
16	21001065			Screw, No.10-24 x .50 Hxnibhd

17	12002213		Thrust Bearing Kit
18	35-2010	207843	Lip Seal Repair Kit
19	21001166		Hook, Suspension Spring
20	21002065	12002773	Spring

the laundry company®

the laundry company®

the laundry company®