Amana NG5319 03 - FR BLKHD, AIR DUCT, FELT SEAL & CYLINDER

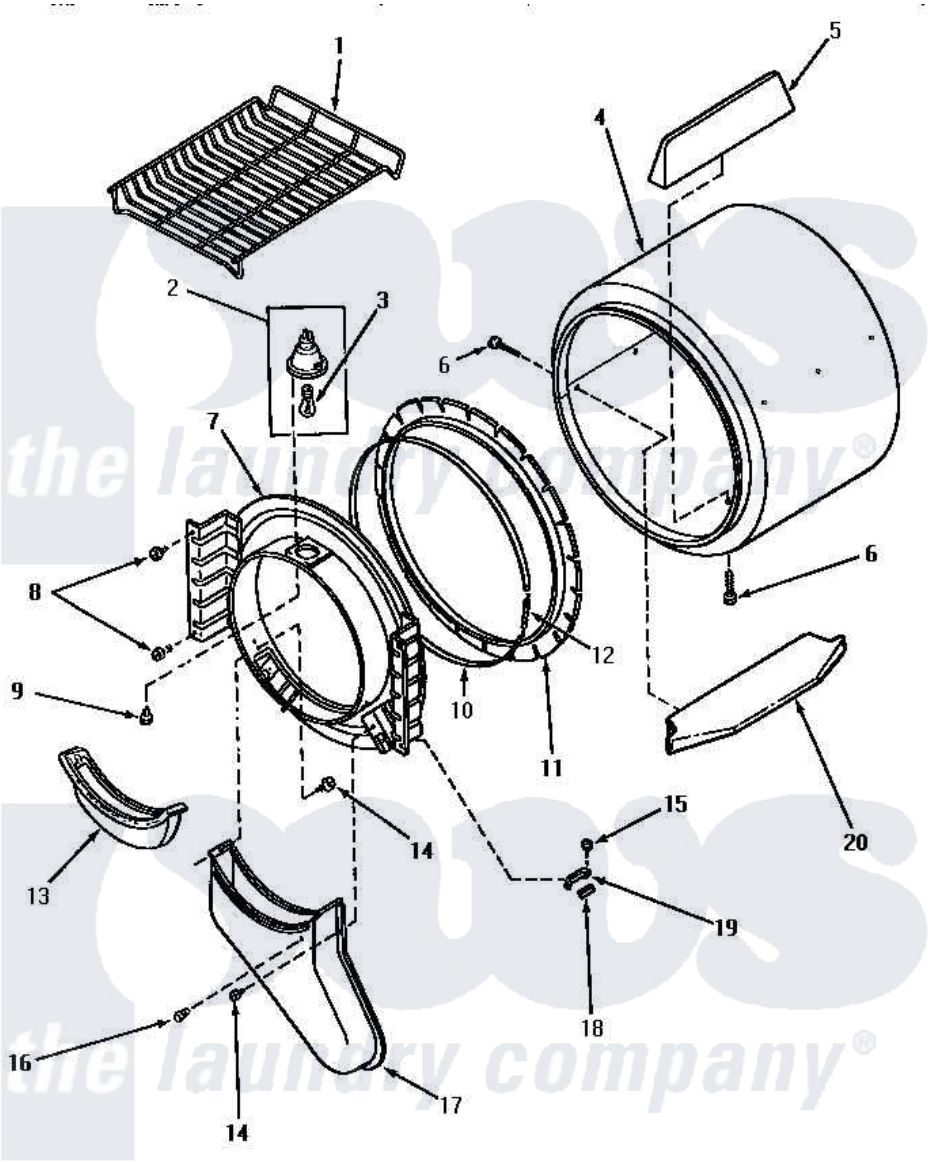

FRONT BULKHEAD, AIR DUCT, FELT SEAL AND CYLINDER

Amana Residential Amana NG5319 Washer Parts Parts Diagram 03 - FR BLKHD, AIR DUCT, FELT SEAL & CYLINDER

Click on the part number to view part

Item	Original Part Number	Replaced By	Status	Part Description
1	58846		Not Available	RACK,DRYING
4	60645P		Not Available	ASSY,CYLINDER PACK
"	61073P		Not Available	ASSY,CYLINDER-WHITE
5	Y61399		Not Available	BAFFLE,CYLINDER-SHORT-
6	56131		Not Available	SCREW,10BT X 1 TAPPING
7	60774P		Not Available	ASSY BULK HEAD
8	33562	27001200		Screw
9	31260			Screw, No.8 X 3/8 Ind H
10	Y56090		Not Available	SEAL STRAP
11	56088			Assembly, Seal
12	52310			Spring
13	61376P			Filter, Lint-White W/Inst.
14	Y33561	489464		Screw
15	23962	W10116760		Screw
16	56938		Not Available	BUMPER
17	60786			Assembly, Air Duct-Front

18	58049		Pad, Thin
19	61448		Glide, Cylinder-Rulon F
20	Y61027	Not Available	BAFFLE,CYLINDER-EXTEND

the laundry company®
the laundry company®
the laundry company®