Crosley CAWSS16445WQ0 07 - BRAKE AND DRIVE TUBE PARTS

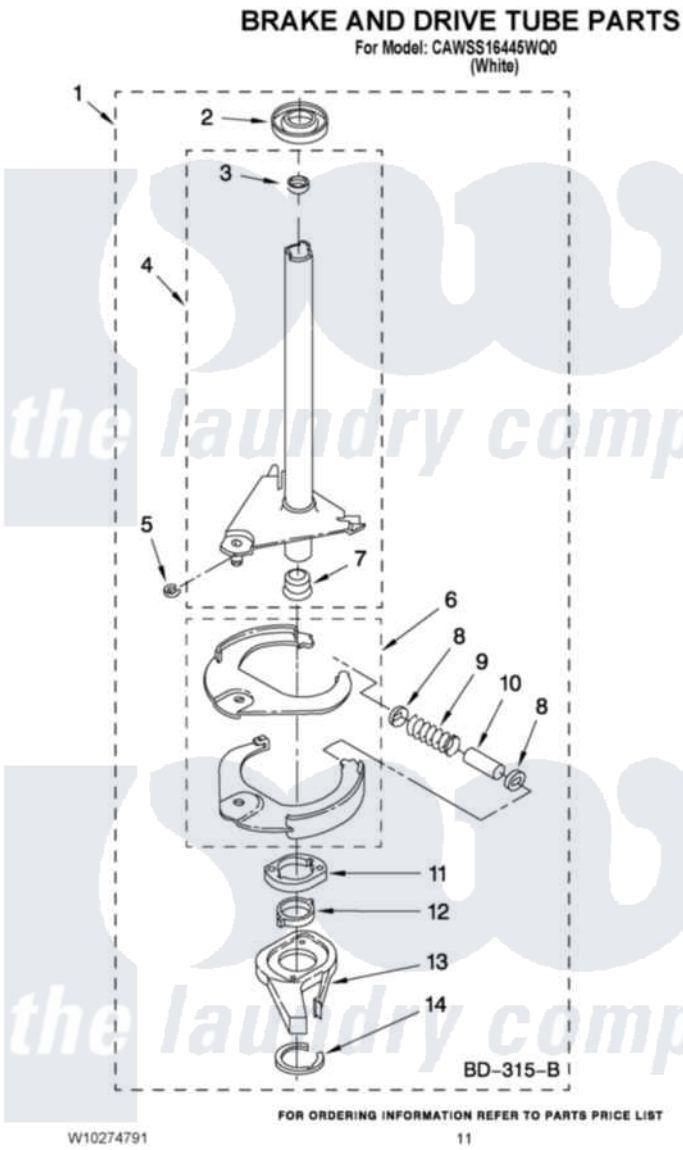

Crosley Residential Crosley CAWSS16445WQ0 Washer Parts Parts Diagram 07 - BRAKE AND DRIVE TUBE PARTS

Click on the part number to view part

Item	Original Part Number	Replaced By	Status	Part Description
1	388952	285792		Basktdrive
2	62658			Ring, Thrust
3	356427			Seal, Spin Pinion
4	64027	64208		Tube-Spin
5	64035	W10083190		Ring, Retaining
6	64232	285438		Shoe-Brake
7	62703	8546462		"T" Bearing, Spin Tube
8	3353956	285658		Sleeve
9	387806		Not Available	Spring, Brake
10	3355360	285658		Sleeve
11	661516	8546461		Cam, Brake Release
12	63022			Sleeve, Cam
13	64194	285790		Lining
14	90368	W10083200		Ring, Retaining
NI	285208			Lubricant