Crosley CDE6000AZW 01 - CABINET

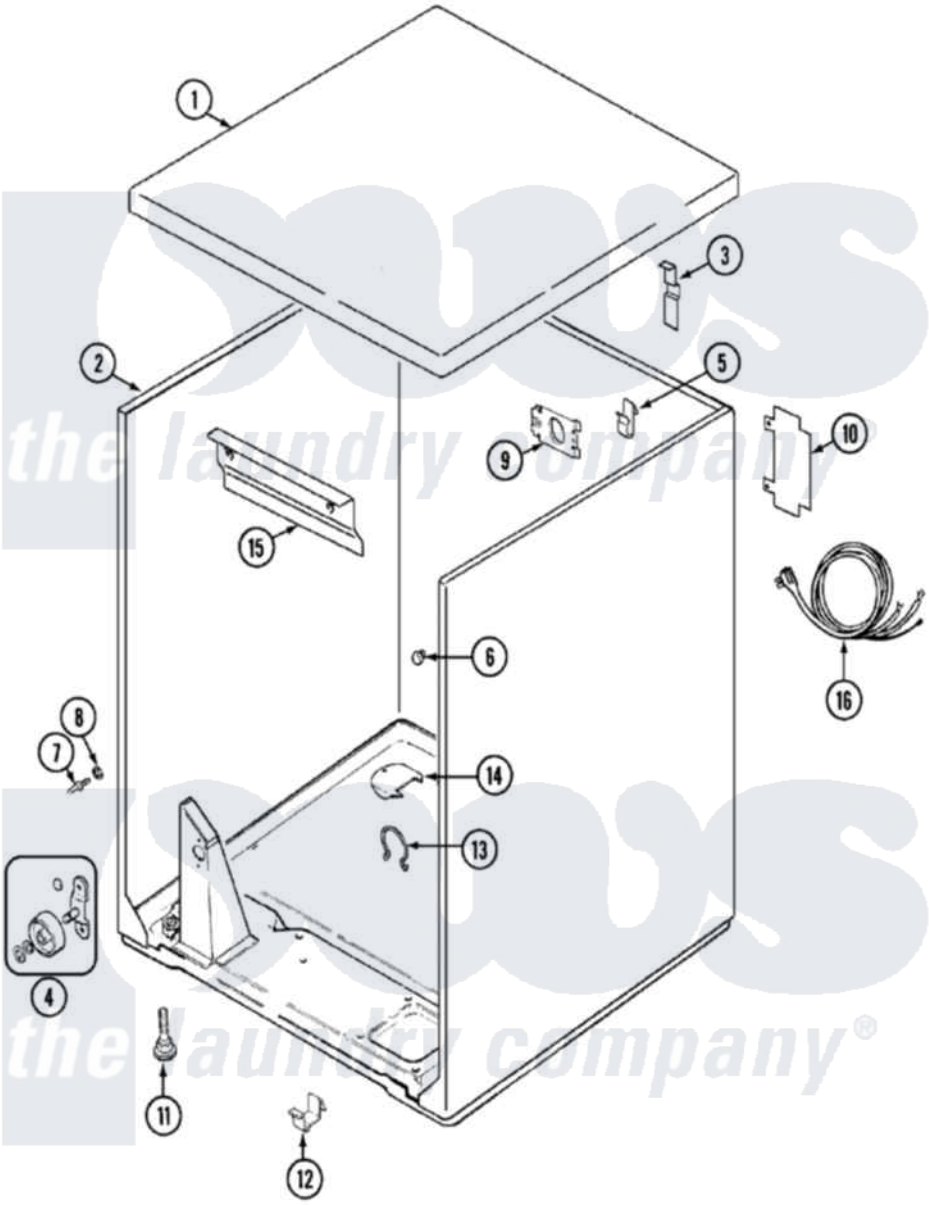

Crosley Residential Crosley CDE6000AZW Dryer Parts Parts Diagram 01 - CABINET
Click on the part number to view part

Item	Original Part Number	Replaced By	Status	Part Description
1	31001423			Top, Cabinet
2	53-2559	31001714		Cabinet And Base Assembly
3	63-5712			Hinge, Cabinet Top
"	35-4128			Pad, Hinge
"	25-3092	90767		Screw, 8A X 3/8 HeX Washer Head Tapping
4	LA-1007	12002126		Reinforcement Brace/Glide Kit
"	LA-1008			Rr Roller Kit
5	25-3034			Clip, Wiring
6	33-2653			Bumper, Cabinet
7	53-0643			Pin, Locator
8	53-0200			Sleeve, Locator Pin
"	25-0224	3400029		Nut, Adapter Plate
9	25-7828	489483		Screw 10-32 X 1/2
"	53-0135		Not Available	SUPPORT, POWER CORD
10	25-7857	90767		Screw, 8A X 3/8 HeX Washer Head Tapping

"	53-0284			Cover, Terminal
11	63-5519		Not Available	LEG, LEVELING
12	53-0120			Clip, Front Panel
13	25-7027	16515		Clip
14	25-7741	W10116760		Screw
"	53-1921			Shield, Wiring
15	53-0133			Shield, Heat

the laundry company®
the laundry company®
the laundry company®