Crosley CDE9505W 04 - TUMBLER

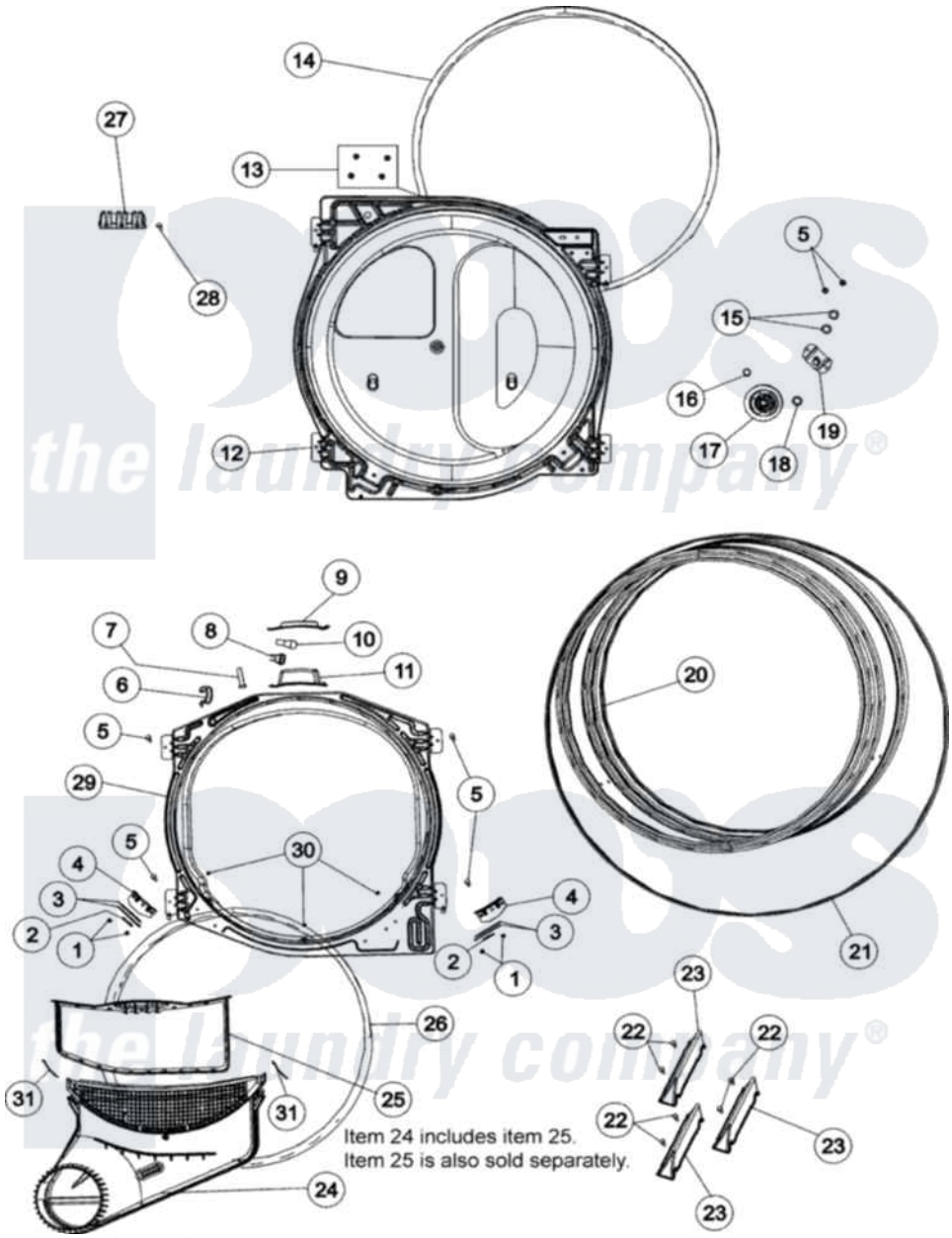

Crosley Residential Crosley CDE9505W Dryer Parts Parts Diagram 04 - TUMBLER
Click on the part number to view part

Item	Original Part Number	Replaced By	Status	Part Description
1	37001031	3370225		Screw
2	500121	510189		Pad Felt
3	40116501	37001298		Glide- Dry
4	37001036			Bracket, Cylinder Glide
5	503661	27001200		Screw
6	504034			Clip, Wire
7	505295			Screw, No.8ab-16 x 3/4 PH
8	504458	Y504452		Light Assembly
9	40094301			Lens, Light
10	Y60954	67001316		Bulb, Light
11	503622	Y504452		Light Assembly
12	504801W	502614WP		Bulkhead, Rear
13	503688			Screw, 10B-16 X .34 l
14	37001132			Seal, Cylinder
15	52549			Washer, 501 ID X3/4 Odx
16	23748			Ring, Retaining

17	37001042		Assembly, Cylinder Roller
18	Y504082		Washer, Wave
19	40113601		Assembly, Roller Brkt
20	504467W	504467WP	Cylinder Assembly
21	40111201		Belt, Cylinder
22	Y62588		Screw, 10BT-12 X 1 Tap
23	37001125	12002559	Baffle Kit
24	37001141		Air Duct Assembly
25	37001142		Filter, Lint
26	37001132		Seal, Cylinder
27	61923		Block, Terminal
"	Y61199	3400094	Screw, 10-32 X 3/8
28	501285		Screw, No.12 X 9/16-Pla
29	503616W	503616WP	Assembly, Frt Bulkhead
30	37001030		Screw, No.8ab-16 x 3/4 Fh
31	503625		Sensor, Moisture
"	40012001		Clip, Retaining Harness

the laundry company®
the laundry company®