Crosley CW20P4A 03 - TRANSMISSION (ORIG. REV. A-D)

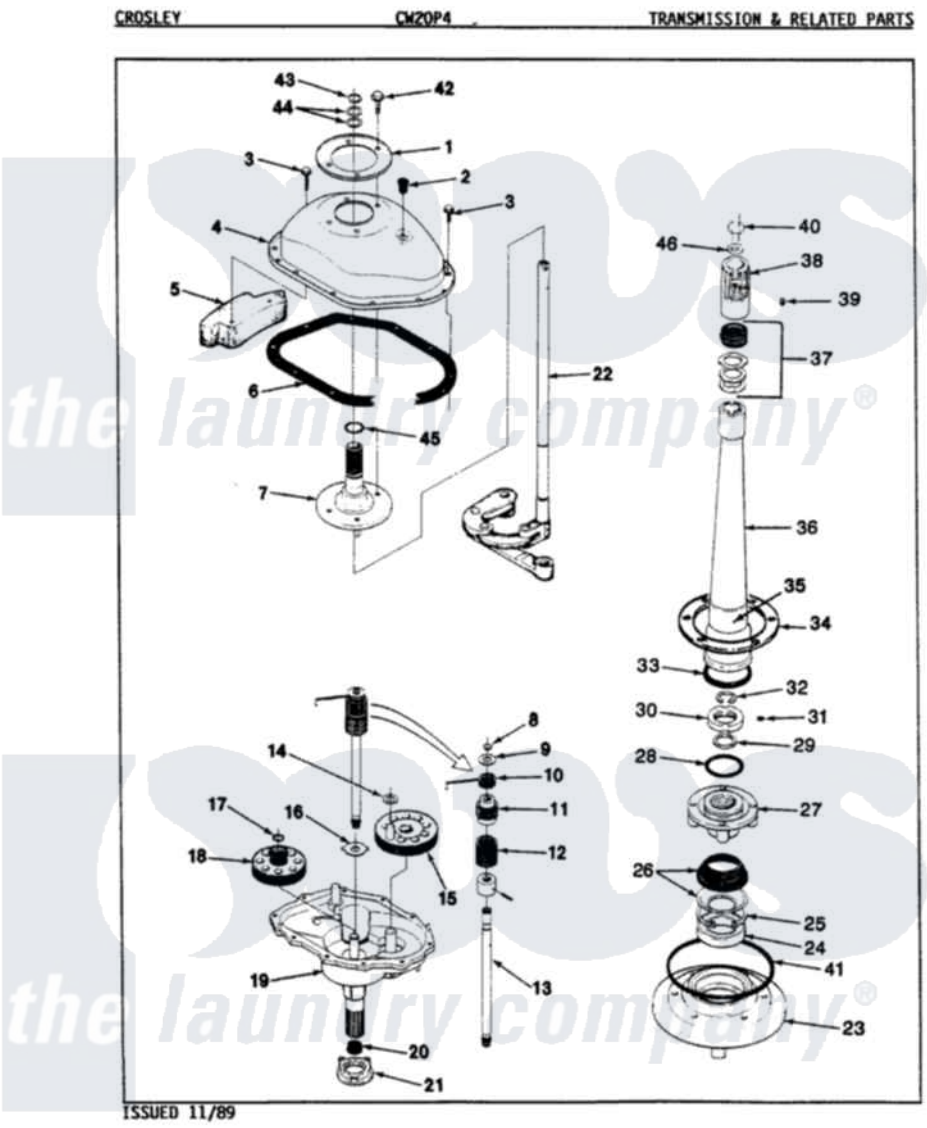

Crosley Residential Crosley CW20P4A Washer Parts Parts Diagram 03 - TRANSMISSION (ORIG. REV. A-D)
Click on the part number to view part

Item	Original Part Number	Replaced By	Status	Part Description
1	33-9893	33-7187		Covr Reinforcmt
2	33-9373		Not Available	OIL FILL PLUG
3	25-7916			Bolt
4	33-4286N			Transmission Cover Kit
5	35-2130		Not Available	COUNTER WEIGHT
6	35-1030		Not Available	GASKET, TRANSMISSION HOUSING
7	33-8763	33-4286N		Transmission Cover Kit
8	25-7847			Ring, Retaining
9	25-7416		Not Available	WASHER, FLAT
10	33-6114	33-6463		Spring
11	35-2001			Pinion, Drive
12	33-3195		Not Available	SPRING
13	35-2116		Not Available	DRIVE SHAFT & HUB ASSY
"	LA-2005			Clutch Assembly Kit
14	25-7091			Thrust Washer
15	35-2043			Crank Gear

16	25-7274		Not Available	WASHER, STEEL
"	35-2070			Washer, Steel W/Tabs
"	35-2462	35-3825		Washer, Nylon
17	25-7853	25-7933		Ring, Retaining
18	35-2013	35-0547		Cluster Gear
19	35-2012		Not Available	TRANSMISSION HOUSING ASSY
20	35-2010	207843		Lip Seal Repair Kit
21	35-2111	12001562		Bearing Assembly
22	35-0628	35-3573		Linkage As
23	35-2059	35-2450		Housing Assembly, Bearing And Seal
24	35-2205			Bearing, Spin
25	25-7849			Retaining Ring
26	33-7224N			Tub Seal Assembly
27	33-9987		Not Available	BASKET HUB ASM
28	35-2061			Gasket, Tub To Housing
29	25-7722	33-4293N		Gasket Kit
30	33-9507	33-9504		Locknut
31	25-7120			Set Screw
32	25-7848			Retaining Ring
33	33-8718			Gasket
34	35-0930			Gasket
35	33-6790			Bearing, Agitator
36	33-4283N		Not Available	CENTERPOST KIT
37	33-7806N			Seal Assembly
38	33-9729		Not Available	DRIVE BLOCK ASM
39	25-7378			Set Screw
40	33-6817			Stud
41	35-2060			Seal, Tub To Housing
42	25-7359			Screw
43	25-7848			Retaining Ring
44	25-7057			Washer, Flat
45	25-7722	33-4293N		Gasket Kit
46	25-7316			Flat Washer
"	LA-2001		Not Available	TRANSMISSION REPLACEMENT KIT

the laundry company®