Crosley CW20P6A 14 - WATER CARRYING (ORIG. REV. A-D)

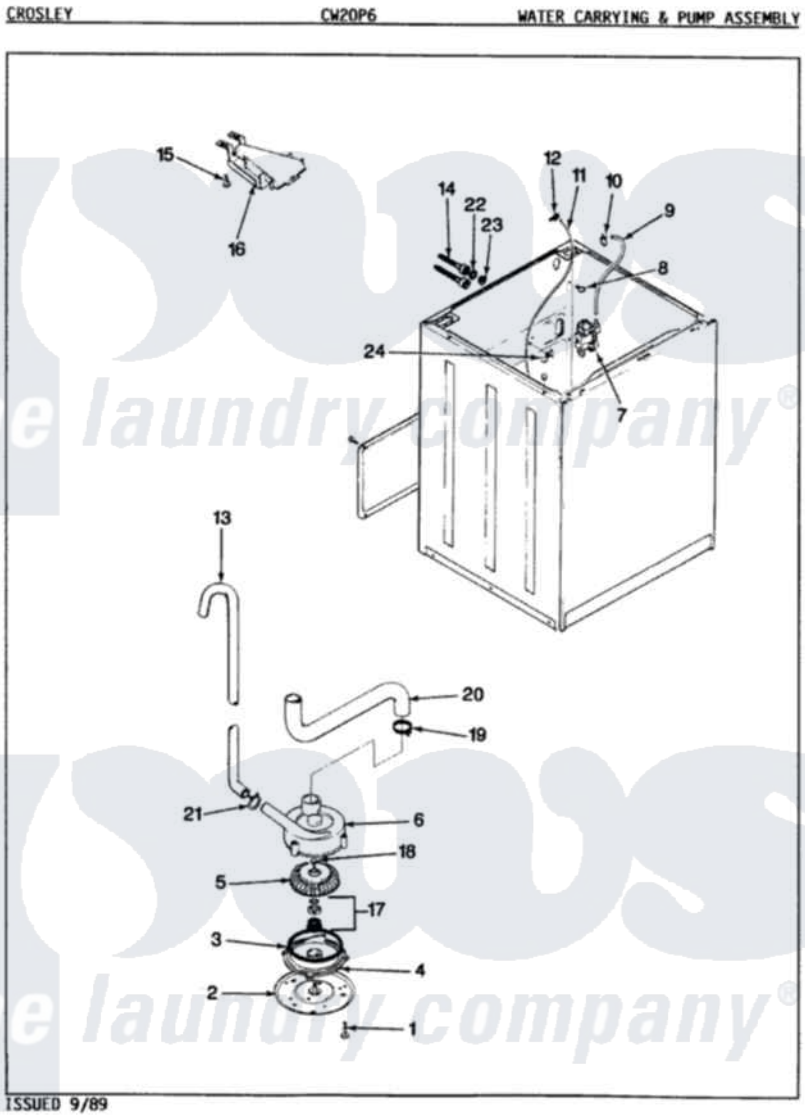

Crosley Residential Crosley CW20P6A Washer Parts Parts Diagram 14 - WATER CARRYING (ORIG. REV. A-D)
Click on the part number to view part

Item	Original Part Number	Replaced By	Status	Part Description
1	25-7405	3196164		Screw
2	33-6035		Not Available	PLATE & PULLEY ASSY.
3	33-6032			Gasket
4	35-2058			Base, Pump
5	35-2057	35-6465		Pump Assem
6	35-2056		Not Available	HOUSING, PUMP
"	35-2099	35-6465		Pump Assem
7	25-7220			Clip, Cabinet Top
"	33-7044	35-2374N		Valve, Water
"	35-2374	35-2374N		Valve, Water
8	25-7867	596669		Clamp, Manifold
9	35-0541		Not Available	WATR INLET HOSE
"	35-2378	12002749		Hose, Flume Kit
10	25-7867	596669		Clamp, Manifold
"	25-7866	489503		Clamp
11	35-2261		Not Available	PAD, PRESSURE SWITCH HOSE

"	35-2321	21001748		Hose, Pressure Switch
12	33-6099			Clamp
13	33-9436	211704		Hose, Drain
14	33-7046	89503		Hose-Inlet
"	35-0873	76313		Hosefill
15	25-3092	90767		Screw, 8A X 3/8 HeX Washer Head Tapping
16	35-2051	21001760		Flume Assembly / Water Diverter
17	35-0707			Seal, Seat And "O" Ring
18	25-7894	W10001180		Screw
19	25-6099	33-6099		Clamp
20	35-2131		Not Available	HOSE, SUMP TO PUMP
21	25-7796	596669		Clamp, Manifold
22	25-7048			Washer
23	33-7313	33-4264N		Strainer And Washer Kit
24	33-6099			Clamp

the laundry company®
the laundry company®