Crosley CW26P6KA 02 - BASE & DRIVE (REV. E-J)

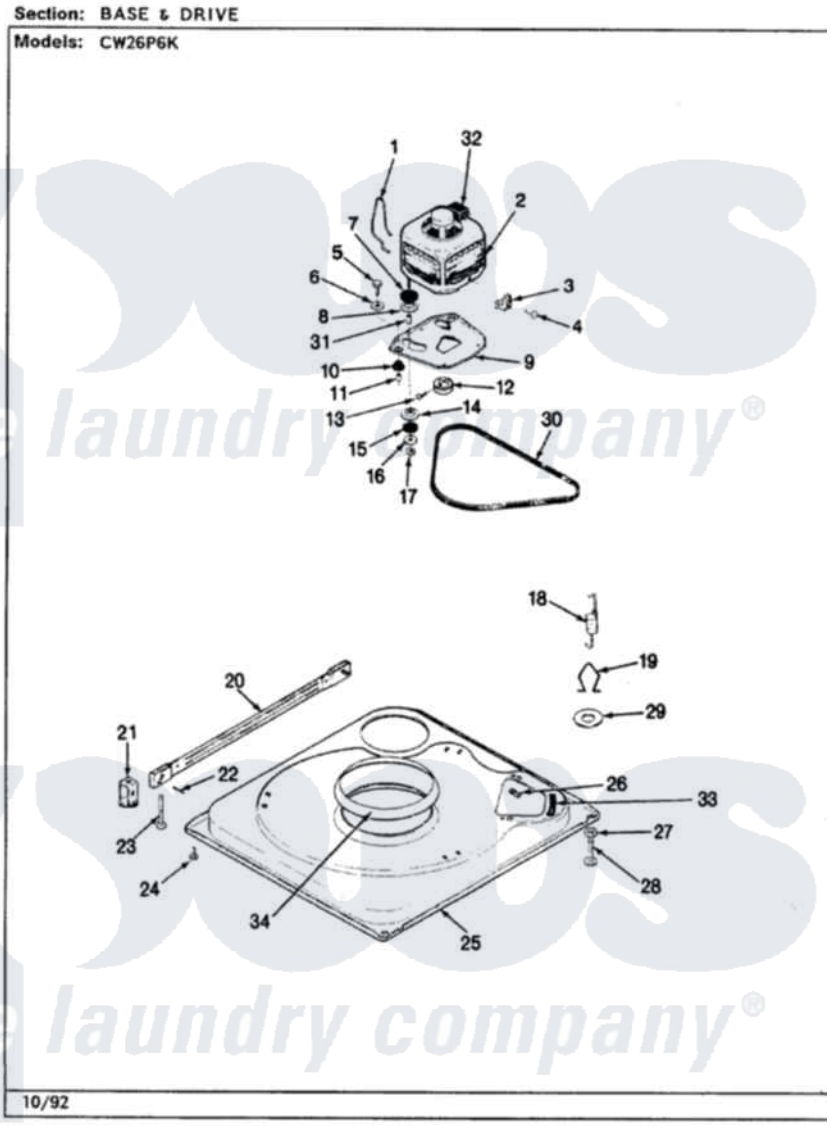

Crosley Residential Crosley CW26P6KA Washer Parts Parts Diagram 02 - BASE & DRIVE (REV. E-J)
Click on the part number to view part

Item	Original Part Number	Replaced By	Status	Part Description
1	35-0235			Spring, Motor Pivot
2	LA-2003			Motor Replacement Kit
"	35-2215	LA-2003		Motor Replacement Kit
3	33-9945			Slide, Foot
4	25-7418	33001178		Back, Tumbler
5	25-7833	21001977		Screw
6	25-7834			Washer, Motor/Base Screw
7	33-9946			Isolator, Motor
8	33-9944	35-3570		Washer, Motor Pivot
9	35-2810	21001783		Plate And Screw Assembly
10	33-9941	35-3646		Isolator, Motor Plate
11	25-7831			Spacer, Mounting
12	35-2124	W10143344		Pulley
13	25-7117			Set Screw
14	33-9943	35-3571		Slide, Motor Pivot
15	33-9967			Washer, Motor Isolator

16	25-7047			Washer, Flat
17	25-7325	Y707702		Locknut
18	35-2681		Not Available	SPRING, SUSPENSION
"	35-3658			Spring, Suspension
19	35-2976		Not Available	HOOK, SUSPENSION SPRING
20	35-2049	21001881		Bar, Stabilizer
21	35-2046			Bracket, Stabilizer
22	35-2052			Pin, Stabilizer
23	35-2050	22004469		Leg And Foot Self Stabalizing
24	25-7828	489483		Screw 10-32 X 1/2
"	35-2039		Not Available	PAD, FOOT
25	35-2984		Not Available	BASE
26	25-7838	25-7845		Speednut, Motor
27	25-7915			Hex Nut
28	35-0837	25001119		Foot And Pad Assembly
"	35-0772	25001119		Foot And Pad Assembly
29	Y25-7951			Washer, Suspension Hook
30	35-2320	21352320		Belt, Drive
31	25-7830			Spacer
32	33-9765			Switch, Motor
33	35-2065			Pad, Motor Plate
34	35-2357	21002026		Snubber

the laundry company®
the laundry company®