Crosley CW8000W 04 - TOP

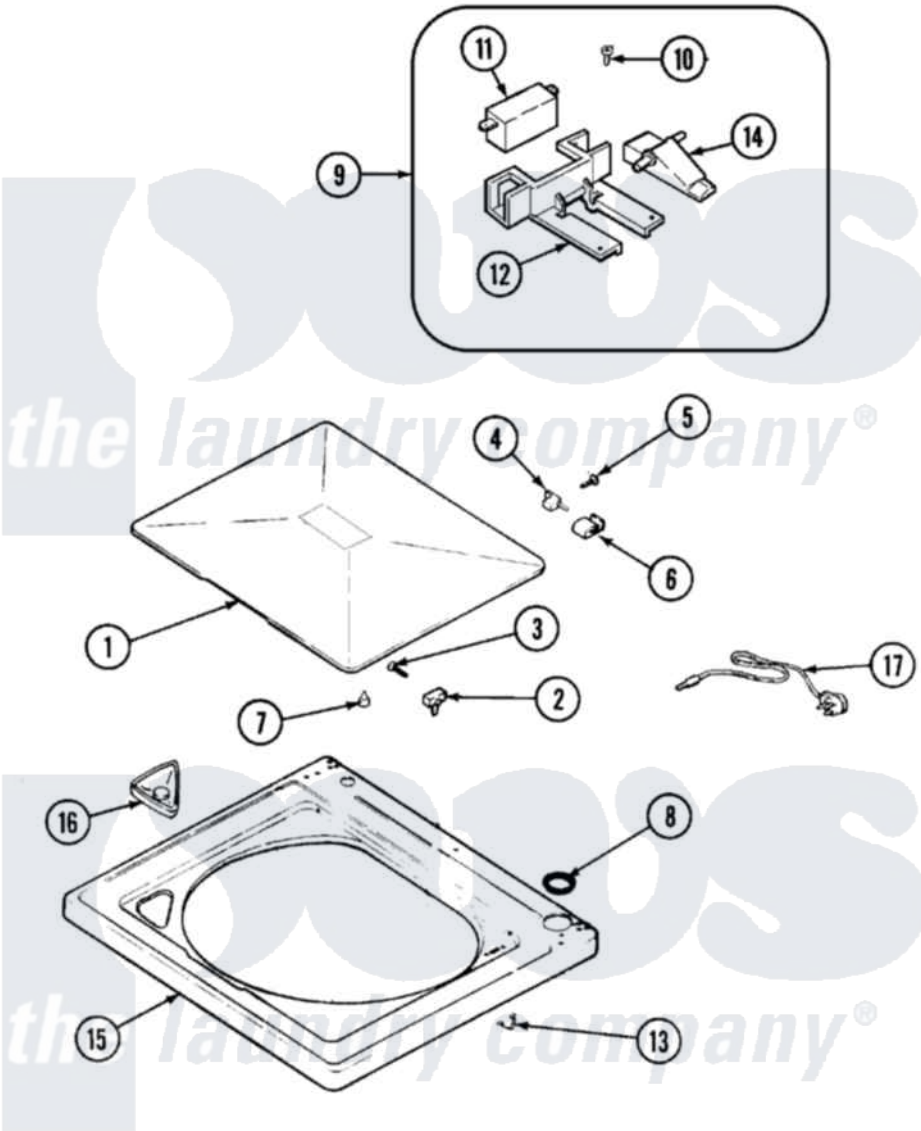

Crosley Residential Crosley CW8000W Washer Parts Parts Diagram 04 - TOP
Click on the part number to view part

Item	Original Part Number	Replaced By	Status	Part Description
1	35-2026			Lid
2	43-0057			Actuator, Door Switch
3	25-7438			Screw
"	25-7436			Nylite Washer
4	35-2045			Pin, Hinge
5	25-7893			Screw
6	35-2044			Hinge, Lid
7	35-0581			Bumper, Door
8	35-2063			Bushing, Insulator
"	35-2064			Bushing, Insulating
9	21001137	12001187		Kit, Lid Switch Assembly
10	21001136	3400872		Screw, 8-18 X 3/8
11	21001148	12001187		Kit, Lid Switch Assembly
12	21001135			Housing, Lid Switch
13	25-7878			Clip
14	21001134			Lever, Lid Switch

15	21001602	Top, Cabinet
16	21001597	Dispenser, Bleach
17	21001592	Cord, Power

the laundry company®
the laundry company®
the laundry company®