Hoover HAV1200ARW 13 - WIRING INFORMATION

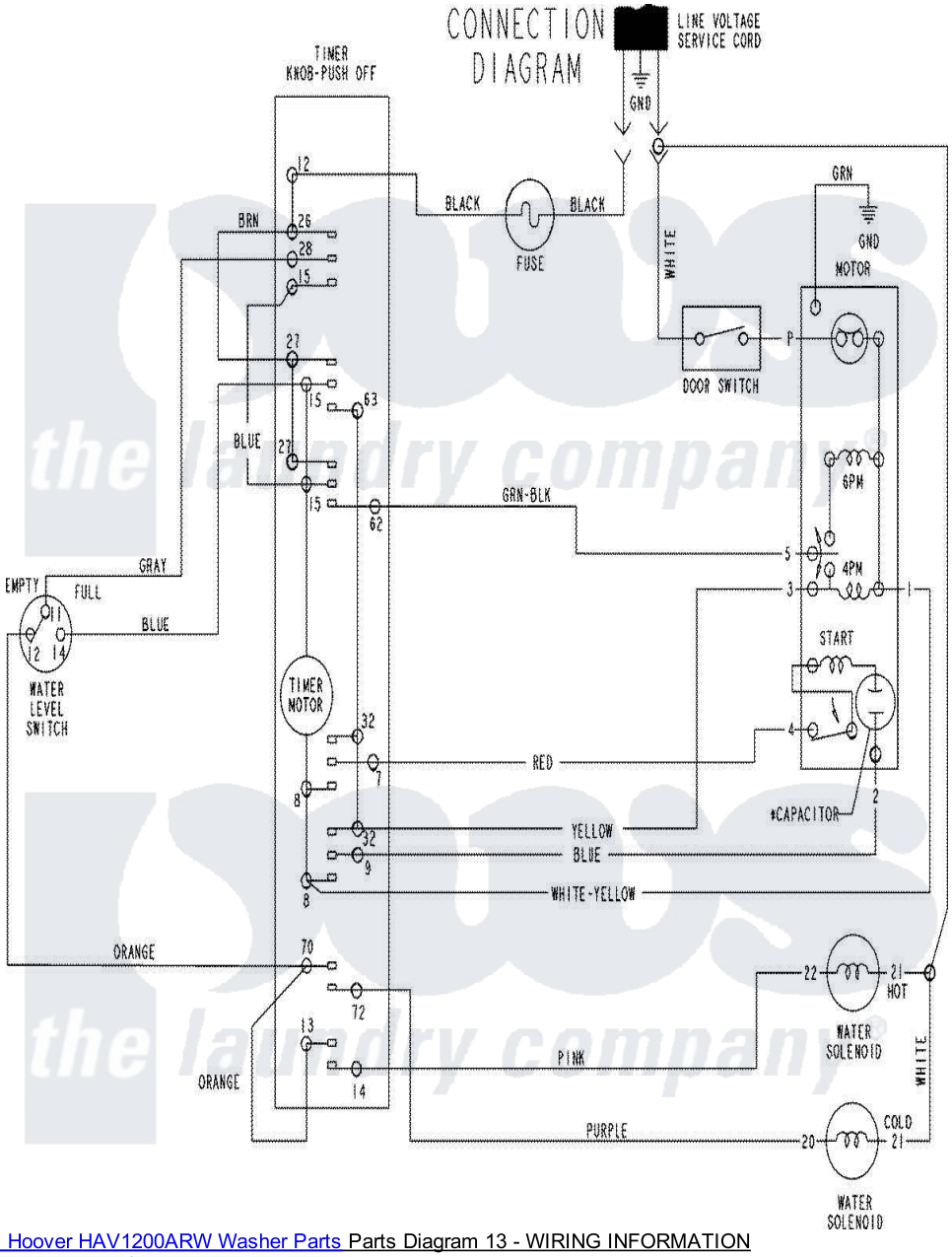

Hoover Residential Hoover HAV1200ARW Washer Parts Parts Diagram 13 - WIRING INFORMATION
Click on the part number to view part

Item	Original Part Number	Replaced By	Status	Part Description
NI	15003854		Not Available	WIRING INFORMATION