Hoover HAV1200AWW 08 - TRANSMISSION

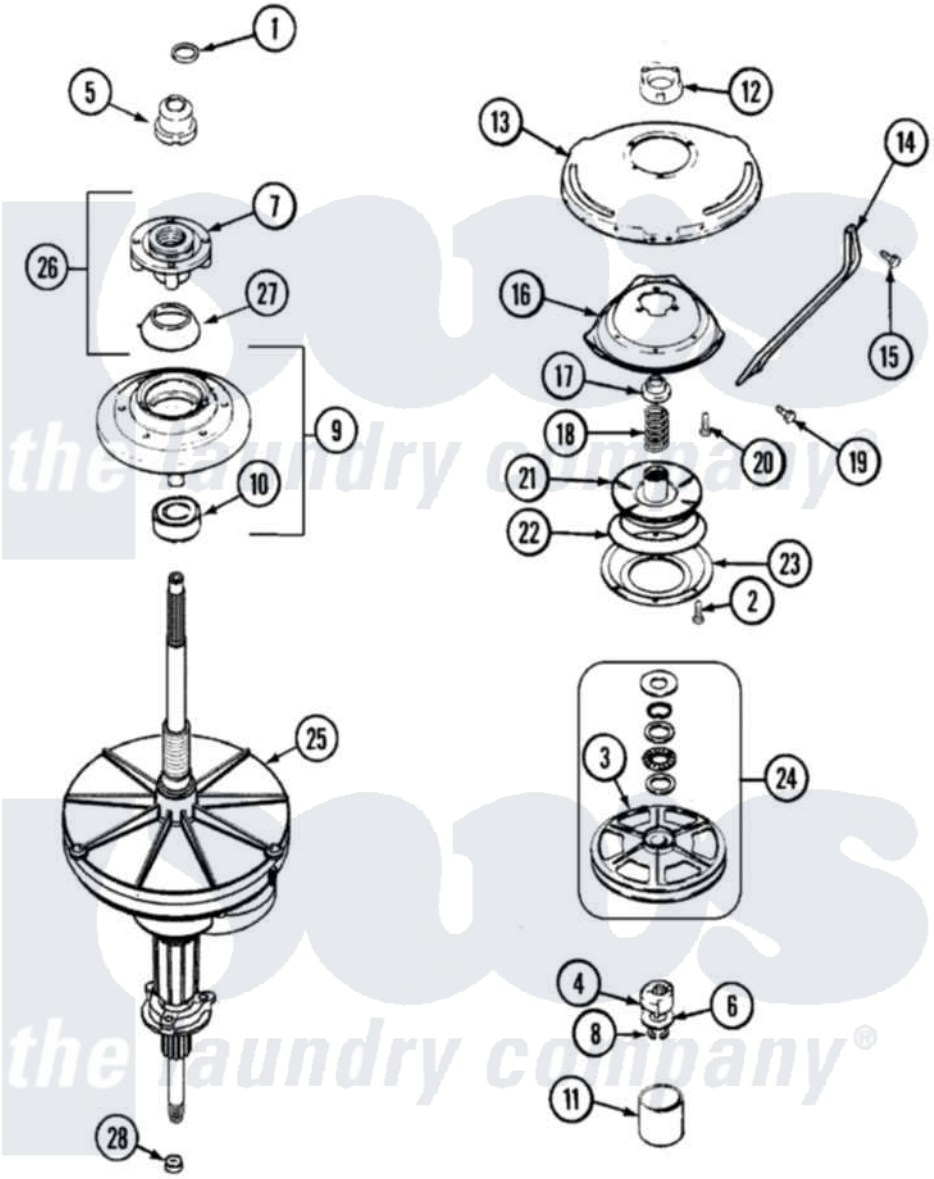

Hoover Residential Hoover HAV1200AWW Washer Parts Parts Diagram 08 - TRANSMISSION
Click on the part number to view part

Item	Original Part Number	Replaced By	Status	Part Description
1	25-7941			"O" Ring, Agtr Drive Shaft
2	21001065			Screw, No.10-24 x .50 Hxnibhd
3	12001797	12002213		Thrust Bearing Kit
4	LA-2007	12002213		Thrust Bearing Kit
5	21001533	35-5655-1		Seal
6	35-2132			Washer, 1.25ODX.530IDX.032
"	35-2082			Washer, 1.25ODX.530IDX.062
7	21001515	12001598		Tub Seal Assembly--W
8	25-7854			Ring, Retaining
9	21001508	12001561		Bearing And Seal Housing Assembly
10	35-2205			Bearing, Spin
11	35-2007			Cap, Dust
"	W10124350		Not Available	NOT REQUIRED PART OR SEE NOTE KITTED WITH PULLEY ITEM No.3
12	35-2205			Bearing, Spin

"	12001562		Bearing Assembly
13	21001518		Support, Tub
14	21001532		Brace, Tub
15	25-7930	21001858	Screw 5/16-18 x 1/2
16	21001163		Housing, Suspension
17	35-2017		Retainer, Brake Spring
18	21001647	21001910	Spring, Brake
19	25-7930	21001858	Screw 5/16-18 x 1/2
20	21001509		Screw, High Performance Plastic
21	35-2948	35-6714	Brake Roto
22	21001161	21002026	Snubber
23	21001761	35-6918	Stator, Brake
24	12500036	12002213	Thrust Bearing Kit
25	21001536	35-6615	Ht TranS S
26	12001598		Tub Seal Assembly--W
27	207843		Lip Seal Repair Kit
28	35-2974		Tub Seal/Hub Assembly

the laundry company®
the laundry company®
the laundry company®