# Magic Chef W26FN2K 04 - TUB (REV. A)

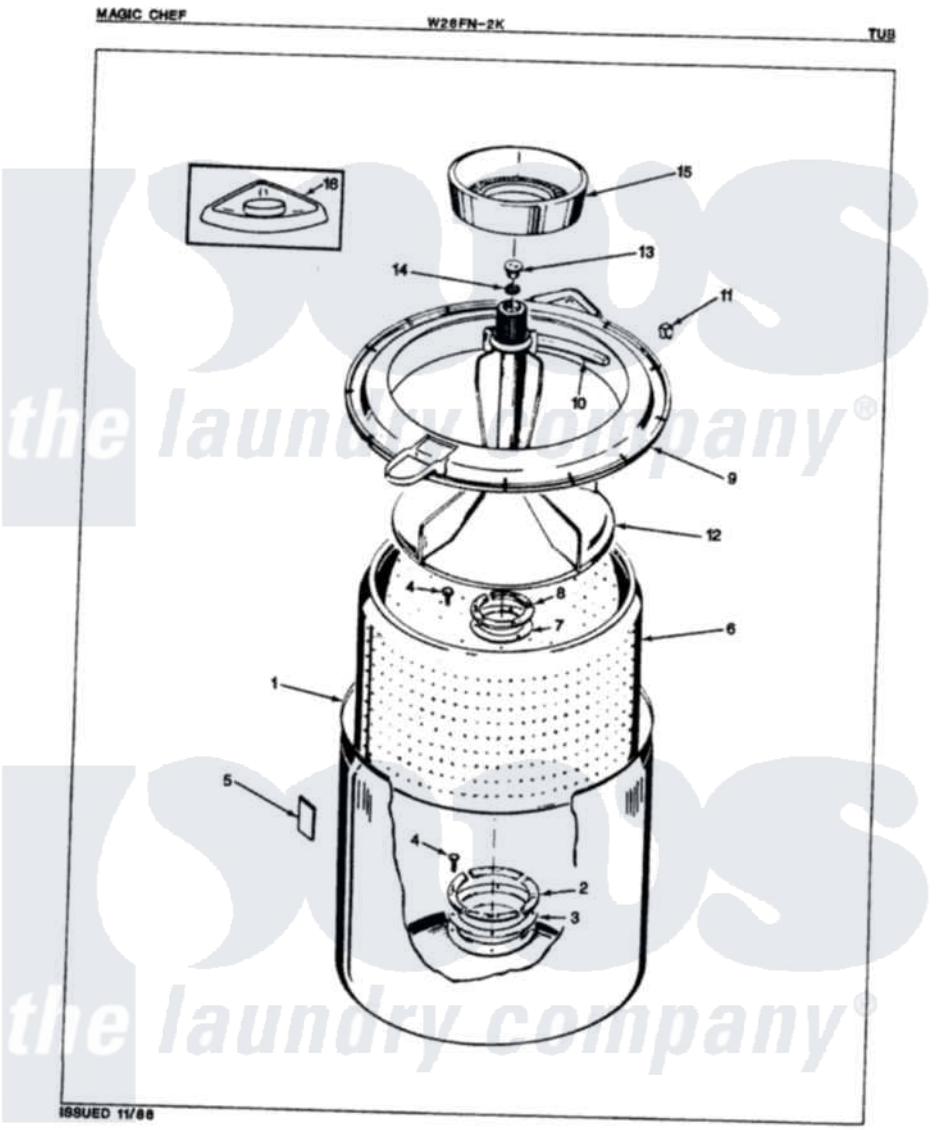


Magic Chef Residential Magic Chef W26FN2K Washer Parts Parts Diagram 04 - TUB (REV. A)
Click on the part number to view part

| Item | Original Part Number | Replaced By | Status | Part Description |
|---|---|---|---|---|
| 1 | 33-9392 | | Not Available | TUB ASSEMBLY |
| 2 | 33-8800 | 33-8800K | | Plate |
| 3 | 33-6905 | | | Gasket |
| 4 | 25-7783 | 4356852 | | Screw |
| 5 | 35-0538 | | | Pad |
| 6 | 35-0004 | | Not Available | BASKET ASM |
| 7 | 33-8959 | | | Gasket |
| 8 | 33-8799 | | Not Available | REINF PLATE |
| 9 | 35-0537 | 35-0993 | | Tub Top |
| 10 | 33-3055 | | | Gasket |
| 11 | 25-7748 | | | Clip |
| 12 | 35-0049 | | Not Available | AGITATOR |
| 13 | 33-6241 | | | Cap |
| 14 | 25-7330 | | | Rubber Washer |
| 15 | 33-9888 | | Not Available | LINT FILTER |
| 16 | 33-9906 | 21001167 | | Dispenser, Bleach |