Magic Chef YE208KV 07 - WIRING INFORMATION (YE208KV)

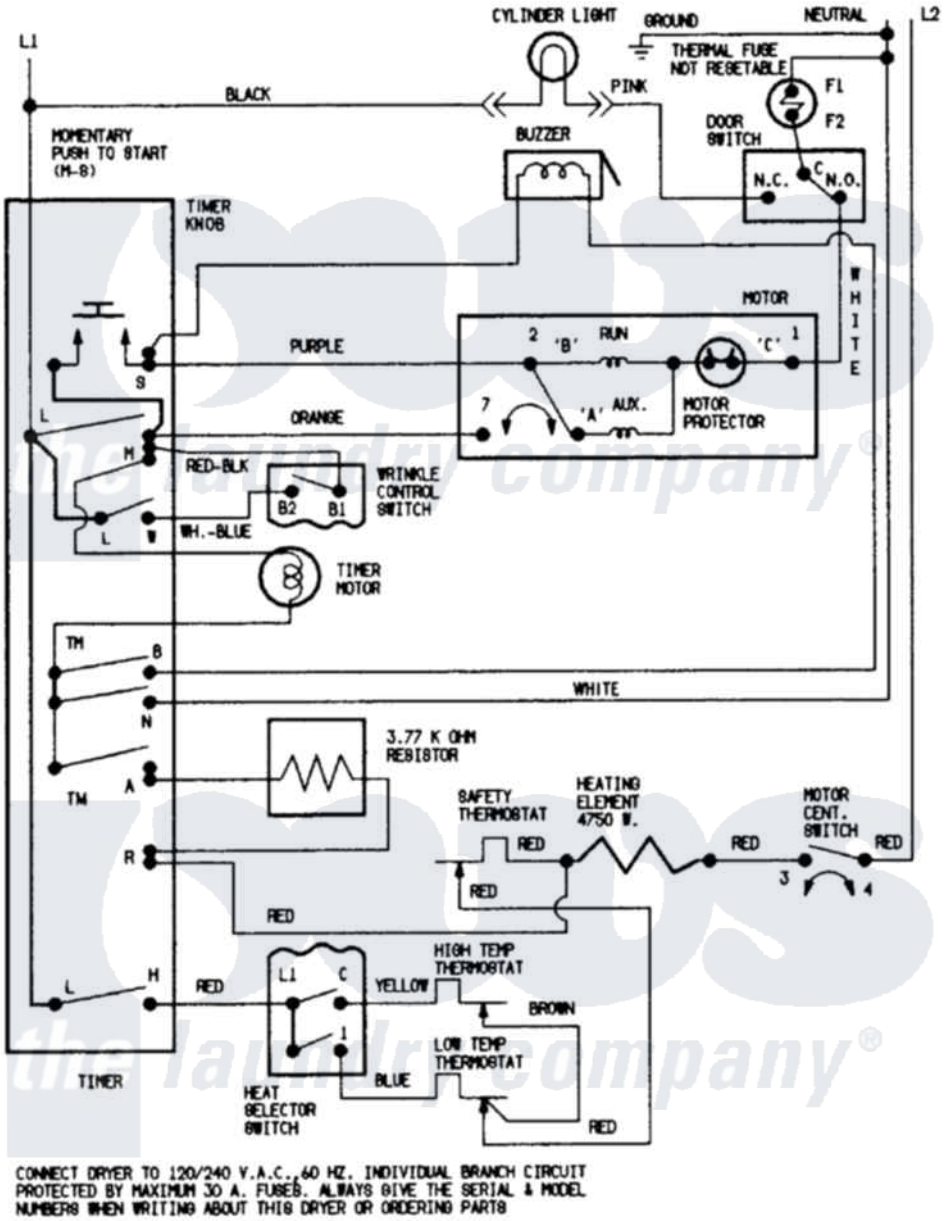

Magic Chef Residential Magic Chef YE208KV Dryer Parts Parts Diagram 07 - WIRING INFORMATION (YE208KV)

Click on the part number to view part

Item	Original Part Number	Replaced By	Status	Part Description
NI	15001225		Not Available	WIRING INFORMATION