Magic Chef YG20JY4 05 - GAS CARRYING (REV. A-D)

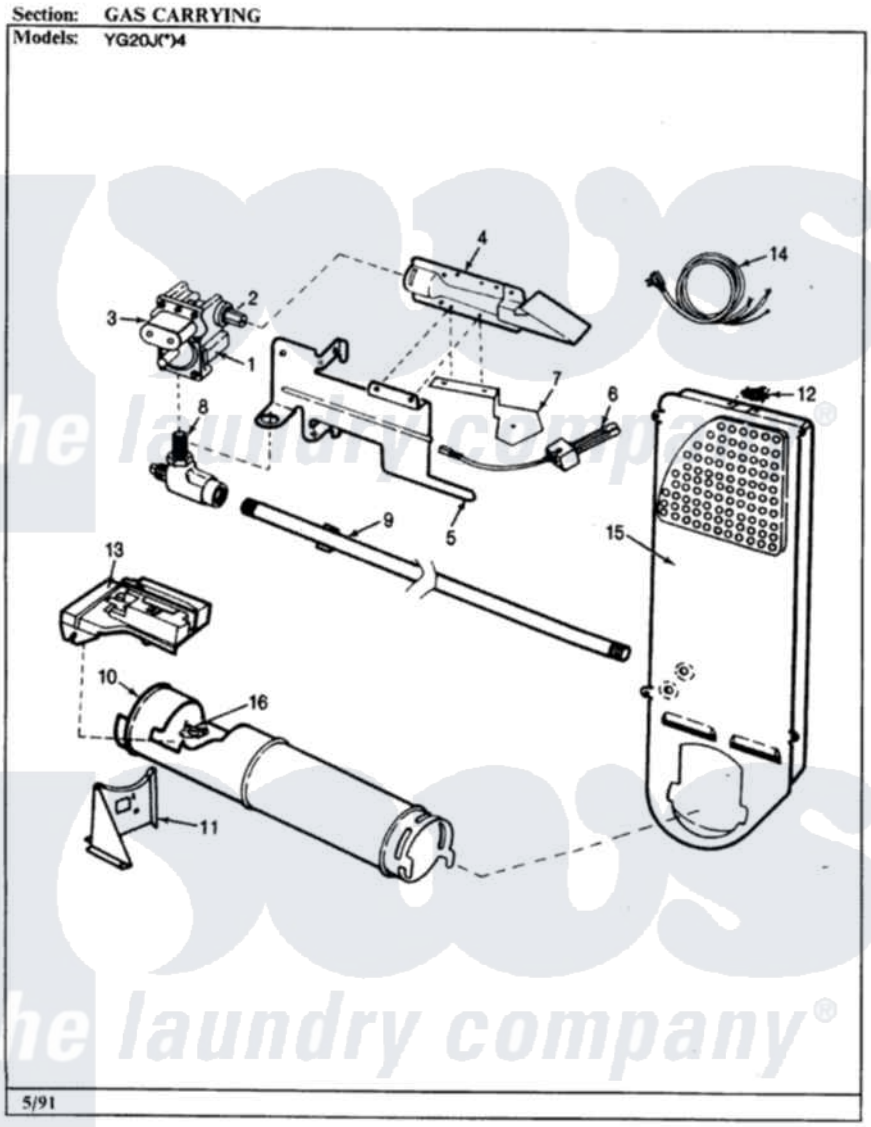

Magic Chef Residential Magic Chef YG20JY4 Dryer Parts Parts Diagram 05 - GAS CARRYING (REV. A-D)
Click on the part number to view part

Item	Original Part Number	Replaced By	Status	Part Description
1	53-0194	306176		Valve, Gas
2	63-3570			Burner Orifice
3	63-6615	279834		Coil-Valve
"	63-6614	279834		Coil-Valve
4	63-6682	31001784		Burner
5	53-0140			Mtg Bracket
"	25-7741	W10116760		Screw
6	53-0689	31001556		Igniter
7	25-7744	8281196		Screw
"	53-0686		Not Available	BRACKET
"	25-3034			Clip, Wiring
"	25-2134	W10116760		Screw
8	53-0101	31001042		Valve, Gas Shut Off
9	53-0173	31001777		Main Gas L
10	53-1884			Housing, Heater
"	25-3032		Not Available	WIRING CLIP

"	53-0138		Not Available	HEATER HOUSING
11	25-7741	W10116760		Screw
"	53-0139		Not Available	HEATER SUPPORT
"	25-3092	90767		Screw, 8A X 3/8 HeX Washer Head Tapping
12	25-0168			Screw
"	53-0143	LA-1053		Fuse Kit, Thermal
13	63-5013	338906		Radiant, Sensor
"	25-2134	W10116760		Screw
14	63-6259	31001547		Cord, Power
15	53-0169		Not Available	INLET AIR DUCT
16	53-1096	LA-1053		Fuse Kit, Thermal
17	LA-1053			Fuse Kit, Thermal
18	63-6766			Conversion Kit

the laundry company®
the laundry company®
the laundry company®