Maytag 3RMTW4905TW1 03 - AGITATOR, BASKET AND TUB PARTS

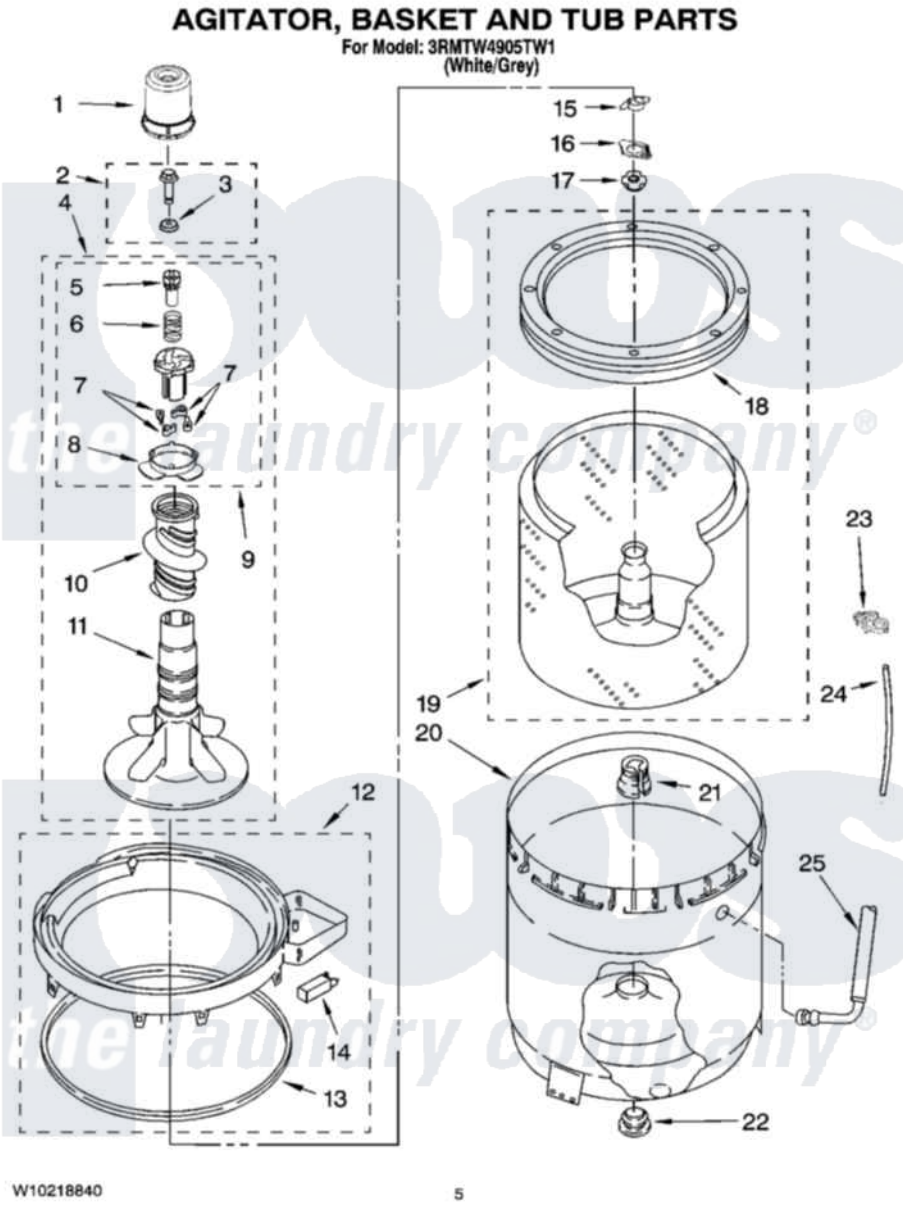

Maytag Residential Maytag 3RMTW4905TW1 Washer Parts Parts Diagram 03 - AGITATOR, BASKET AND TUB PARTS
Click on the part number to view part

Item	Original Part Number	Replaced By	Status	Part Description
1	8528278			Dispenser, Fabric Softener
2	W10003790			Screw And Washer
3	3949550			Washer
4	8538246			Agitator
5	8533540			Retainer, Spring
6	3946997			Spring, Compression
7	3366877	80040		Dog-Agitator
8	8055141			Bearing-Driven Cam
9	8537433			Cam, Driven
10	3946996			Auger, Agitator
11	3947517			Agitator
12	3954507	W10213410		Ring-Tub
13	3359585	3976308		Gasket, Tub Ring
14	8318246	W10213410		Ring-Tub
15	3354845			Clip, Agitator
16	8543666			Washer, Agitator

17	W10116602		Nut, Spanner
18	W10006326		Balance Ring
19	W10006327		Basket And Balance Ring
20	8283125		Tub
21	389140		Tub Block, Basket Drive
22	383727		Gasket, Centerpodt
23	2219077		Clip, Pressure Switch Hose
24	3347780	353244	Hose, Pressure Switch
25	3948705		Hose, Bleach

the laundry company®
the laundry company®
the laundry company®