Maytag 7MMGP0030VQ0 02 - CABINET PARTS

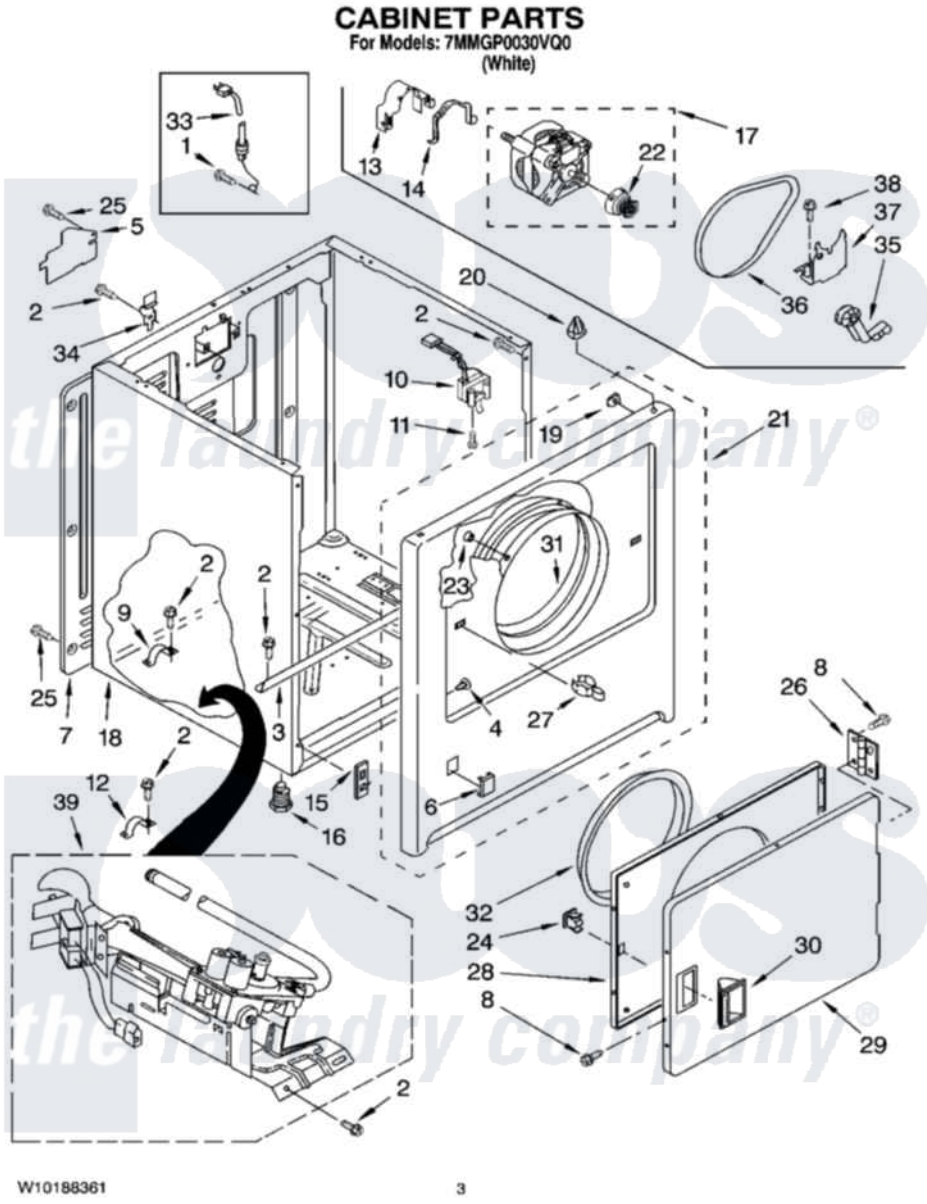

Maytag Residential Maytag 7MMGP0030VQ0 Dryer Parts Parts Diagram 02 - CABINET PARTS
Click on the part number to view part

Item	Original Part Number	Replaced By	Status	Part Description
1	697776	4331106		Screw, No.10-32 X 7/16
2	343641	681414		Screw, 10AB X 1/2
3	8541400			Bracket, Cabinet
4	3404413			Plug, Hinge Hole
5	3396795			Cover, Terminal Block
6	3394975			Plug, Front Panel
7	3396807	280040		Panel-Rear
8	342055	488627		Screw
9	341029			Clamp, Pipe Door Spring
10	3406104	3406105		Door Switch Assembly
11	697773	3395530		Screw
12	3980175			Clamp, Elbow
13	3404162			Clamp, Motor
14	660658			Clamp, Motor Mounting 343481 685441
15	3394083			Clip, Front Panel
16	3392100	49621		Feet-Leveling

"	279810		Foot-Optional
17	8066206	279827	Motor-Drve
18	8530603	8533643	Cabinet
19	98234		Clip, U-Bend
20	690363	18776	Lock, Front Top
21	3403574	279846	Panel
22	8066184		Pulley, Motor
23	685203	279220	Clip
24	690081	279570	Latch
25	693995		Screw, Hex Head
26	3405514	W10362431	Hinge And Pin Assembly
27	696144	279570	Latch
28	3403371		Door, Inner
29	3403361		Door Front
30	8559779		Handle, Door
31	8066124	279264	Air Channel Box
32	3405245		5/16-18 X 3/4
33	344020	3401402	Cord, Power
34	8066217		Hinge, Top
35	691366		Idler And Pulley Assembly
36	W10131364	341241	Belt
37	348780		Base, Motor
38	3400500		Bolt, 3405245 5/16-18 X 3/4
39	8318272	W10465748	Burner-Gas

the laundry company®