Maytag A8440 07 - TUB, AGITATOR, MOUNTING STEM & SEAL

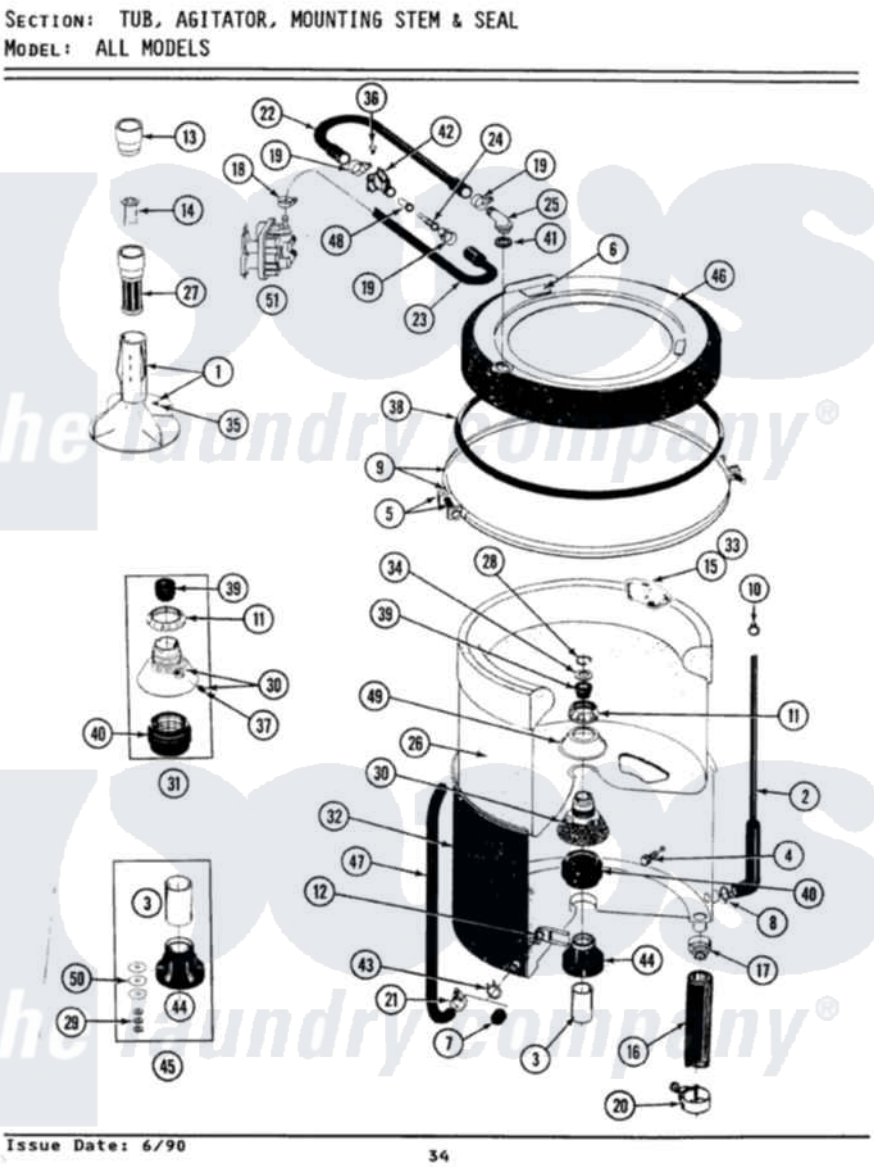

Maytag Residential Maytag A8440 Washer Parts Parts Diagram 07 - TUB, AGITATOR, MOUNTING STEM & SEAL
Click on the part number to view part

Item	Original Part Number	Replaced By	Status	Part Description
1	207538			Agitator W/Lock Screw
2	212942	22001619		Tube, Water Level Switch
3	211130			Bearing Liner, Tub Bearing
4	200744	W10175939		Bolt
"	205254	W10175938		Bolt
5	205529			Nut And Bolt Kit For Tub Clam
6	215232			Bumper, Unbalance
8	211641			Clamp, 1-1/16"
9	200846			Clamp - Tub Cover
10	410296	596669		Clamp, Manifold
11	211047	6-2110472		Nut- Clamp
12	214434			Spout, Deflector
14	215733			Dispensing Cup
16	Y212989			Hose, Outer Tub To Pump
17	200900	616099		Clamp
18	201575			Clamp, Hose

19	202515	596669		Clamp, Manifold
20	202574	3367052		Clamp, Hose
21	205161	489503		Clamp
22	Y215234			Hose, Injector Fill
23	213013			Hose, Injector
24	213015			Nozzle, Injector
25	215235			Tube, Injector
26	201523		Not Available	INNER TUB
"	207830		Not Available	INNER TUB W/PLUG
27	Y207427			Lint Filter Shallow
28	Y015667			Retaining Ring
29	Y054867			Washer, Lock
30	202521	6-2095720		Mounting S
31	204012	6-2095720		Mounting S
32	205486		Not Available	PART NOT USED
34	Y015666			Washer, Retaining -
35	206478		Not Available	SCREW & WASHER FOR AGITATOR
36	312620			Screw, Sems
37	211618	22001423		Set Screw, Mounting Stem
38	211232			Seal, Tub Cover
39	Y0A4298	6-0A57420		Seal- Agitator
40	201537	6-2095720		Mounting S
41	215233			Seal For Injector Tube
42	215447			Sleeve For Injector
43	214739	596669		Clamp, Manifold
44	200824	6-2040130		Tub Bearin
45	204013	6-2040130		Tub Bearin
46	206380		Not Available	COVER, TUB
47	214495			Tube, Inlet To Tub
48	213016	216201		Nozzle
49	211210			Washer, Clamping Nut
50	211100			Washer, Outer Tub
51	205613			Water Valve

the laundry company®