Maytag A8700 03 - CLUTCH, BRAKE & BELTS

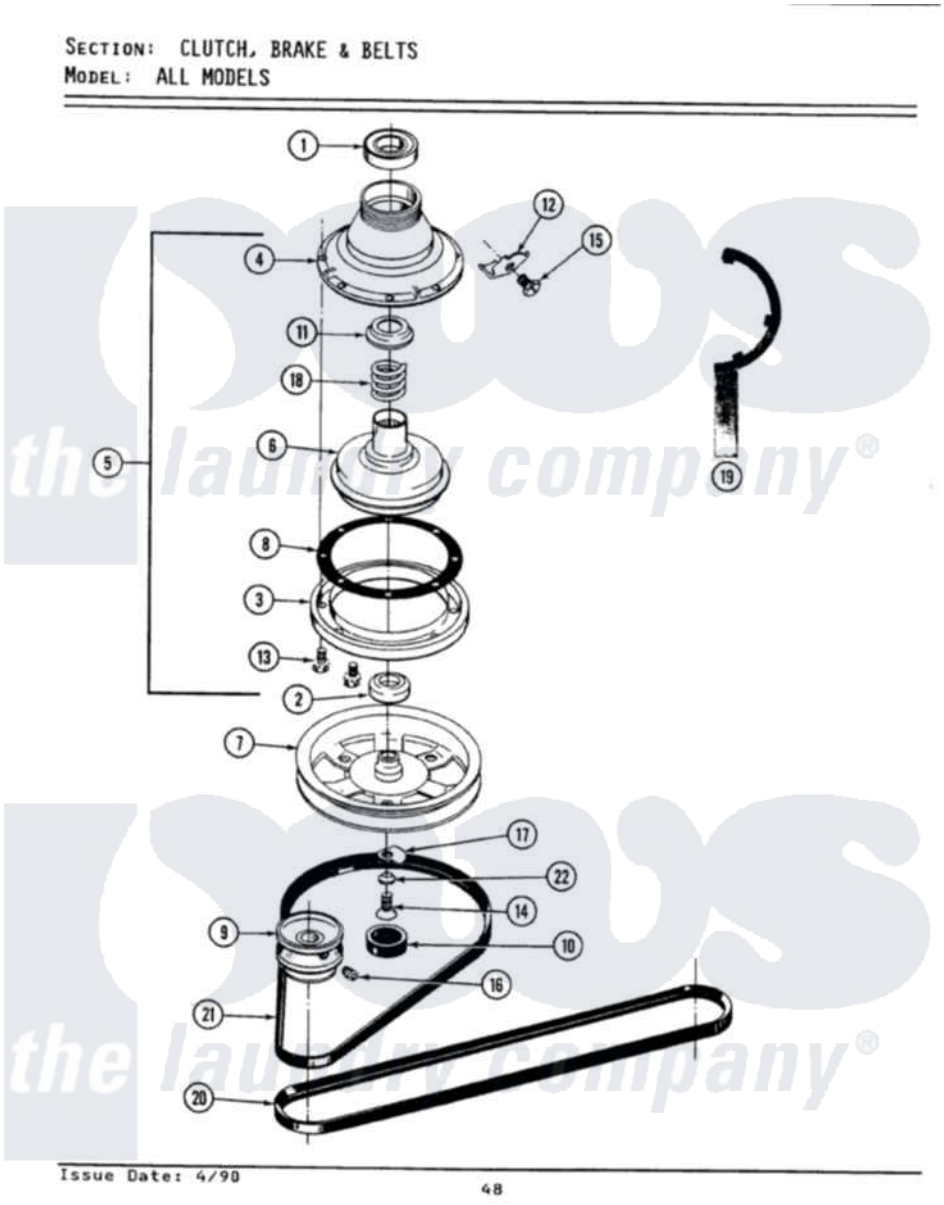

Maytag Residential Maytag A8700 Washer Parts Parts Diagram 03 - CLUTCH, BRAKE & BELTS
Click on the part number to view part

Item	Original Part Number	Replaced By	Status	Part Description
1	Y200720	22003441		Bearing, Rear
2	200835			Bearing, Brake Rotor
3	211043	6-2011900		Brake Asse
4	211045	6-2011900		Brake Asse
5	201190	6-2011900		Brake Asse
6	201126	6-2011900		Brake Asse
7	211059	6-2301530		Pulley
8	211042	6-2011900		Brake Asse
9	200816	6-2008160		Pulley- MO
10	211038		Not Available	CAP, OIL RETAINER
11	211039	6-2011900		Brake Asse
12	213325			Clip, Retaining
13	211000			SCREW, BRAKE DRUM (HEX HEAD)
14	211375	681582		Screw
15	213326			Bolt, Sems Retaining Clip
16	Y053241			Set Screw, Motor Pulley

17	211089		Lug, Stop Pulley
18	211041	6-2011900	Brake Asse
19	Y038315	038315	Tool
20	211124		Part Not Used
21	211125		V Belt, DriVe Pulley
22	211090	22003555	Washer, Stop Lug

the laundry company®
the laundry company®
the laundry company®