Maytag ATW4300TQ0 01 - TOP AND CABINET PARTS

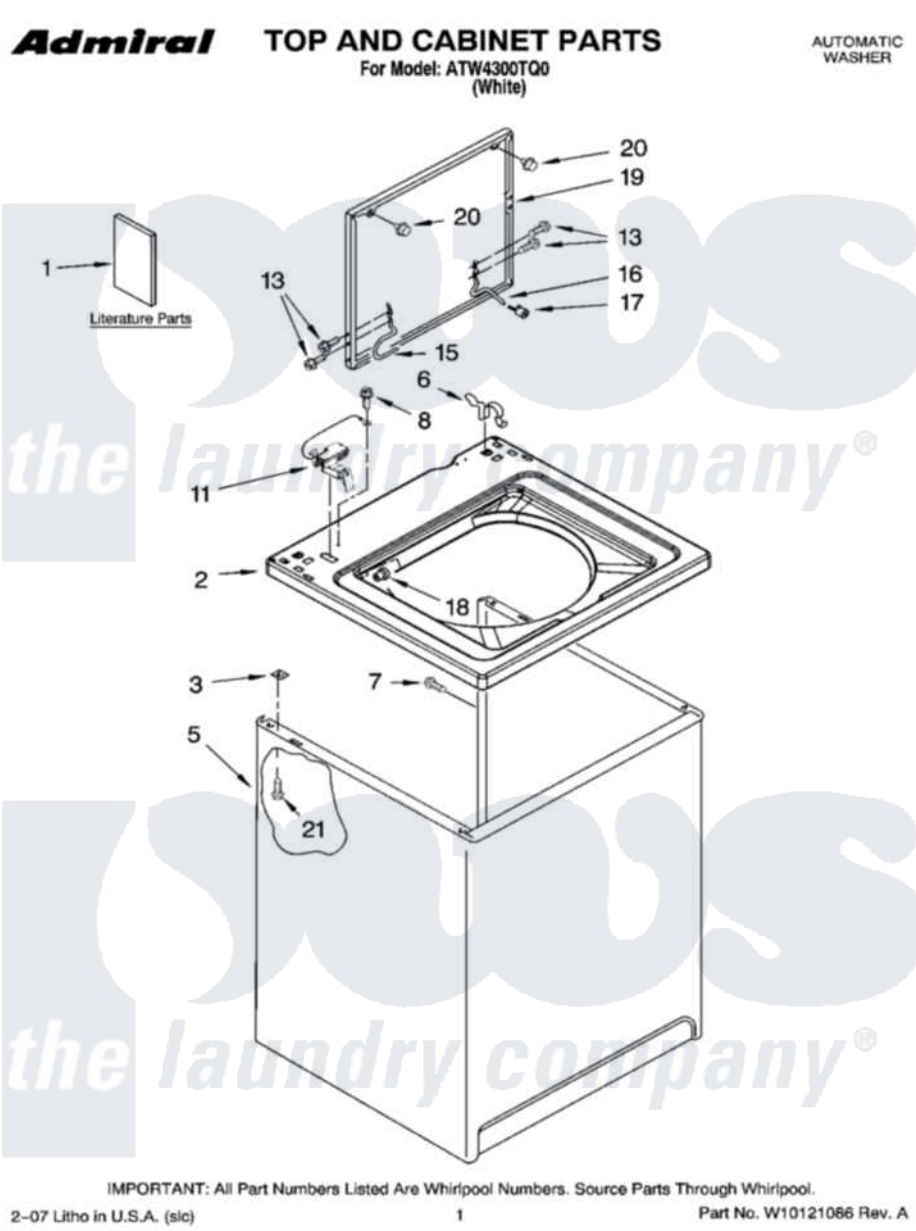

Maytag Residential Maytag ATW4300TQ0 Washer Parts Parts Diagram 01 - TOP AND CABINET PARTS
Click on the part number to view part

Item	Original Part Number	Replaced By	Status	Part Description
1	W10044800			Installation Instructions
"	W10092687		Not Available	Feature Sheet
"	W10092681		Not Available	Use & Care Guide
"	W10092712		Not Available	Energy Guide
"	W10118358		Not Available	Wiring Diagram
2	8559484			Top
3	62750			Spacer, Cabinet To Top (4)
5	63424			Cabinet
6	62780			Clip, Top And Cabinet And Rear Panel
7	3357011	308685		Side Trim)
8	3351614			Screw, Gearcase Cover Mounting
11	8318084			Switch, Lid
13	3351355	W10119828		Screw, Lid Hinge Mounting
15	8318088			Hinge, Lid
16	54583			Hinge, Lid

17	19119		Bumper, Lid Hinge
18	21258		Bearing, Lid Hinge
19	W10093681	W10193857	Lid
20	9724509		Bumper, Lid
21	3390631		Screw, 10-16 X 3/8

the laundry company®

the laundry company®

the laundry company®