Maytag DE21CT 05 - CONTROL CENTER COMPONENTS

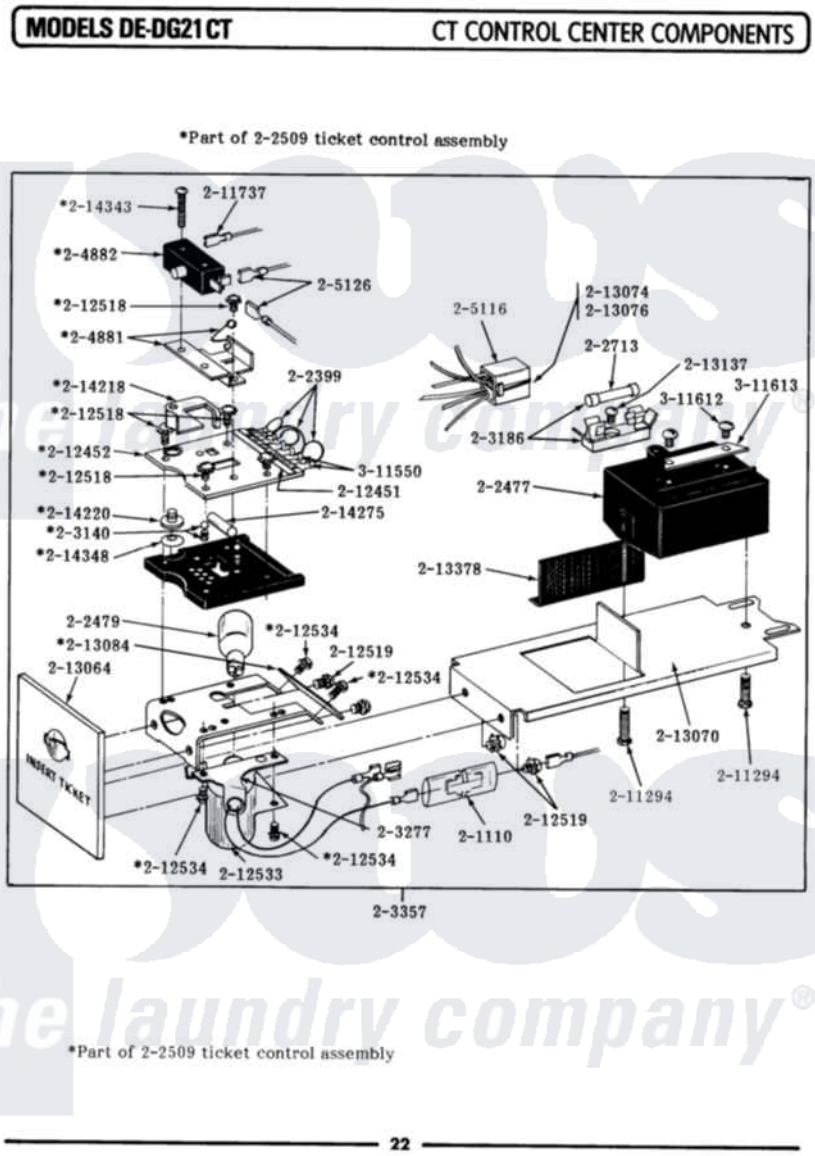

Maytag Residential Maytag DE21CT Dryer Parts Parts Diagram 05 - CONTROL CENTER COMPONENTS
Click on the part number to view part

Item	Original Part Number	Replaced By	Status	Part Description
001	Y201110		Not Available	CONNECTOR, WIRE (INDIC. LIGHT)
002	NLA		Not Available	JUMPER WIRE (BLACK)
003	202477	22003292		Control As
004	202479	A3167501		Lamp Oven, Int.
005	202509			Ticket Control Assembly
006	202713	22001555		Fuse
007	203140			Contact Ball Kit
008	NLA		Not Available	FUSE BLOCK WITH FUSE
009	NLA		Not Available	LAMP SOCKET WITH BRACKET
010	NLA		Not Available	TICKET RECEIVER ASSEMBLY
011	204881			Cam Plate Assembly
012	204882		Not Available	SWITCH FOR TICKET CONTROL
013	NLA		Not Available	DOUBLE MELT CLIP W/DEFLECTO

014	NLA		Not Available	HARNESS FOR TICKET CONTROL
015	NLA		Not Available	SPADE CONNECTOR
016	211737	248562		Terminal
017	211294	90767		Screw, 8A X 3/8 HeX Washer Head Tapping
018	NLA		Not Available	OVERLAY FOR CIRCUIT BOARD
019	212452			Board, Circuit
020	NLA		Not Available	SEMS SCREW (No.4-40 X 1/2 INC)
021	212519	488234		Screw 8-32 X 1/4
022	212533			SHIELD FOR HEAT LAMP
023	NLA		Not Available	SCREW, SHIELD TO CONTROL
024	NLA		Not Available	FRONT PLATE F/TICKET CONTRO
025	NLA		Not Available	BRACKET FOR TICKET ASSEMBLY
026	213074			Pin Receptacle For Plug
027	NLA		Not Available	PIN FOR PLUG
028	NLA		Not Available	TICKET DEFLECTOR
029	NLA		Not Available	SCREW (No.6 X 1/4 INCH)
030	NLA		Not Available	SHIELD
031	214218			Lever, Switch
032	214220			Adjustment Thumb Wheel
033	214275			Roller For Cam
034	NLA		Not Available	SCREW
035	NLA		Not Available	SPRING WASHER
036	Y311550		Not Available	SPADE (MINIATURE)
037	311612		Not Available	COVER, CIRCUIT BOARD TERMINALS
038	311613	Y311711		Screw, Fuse Block

the laundry company®