Maytag DG19CD 07 - MOTOR, BLOWER, BASE FRAME & THERMOSTATS

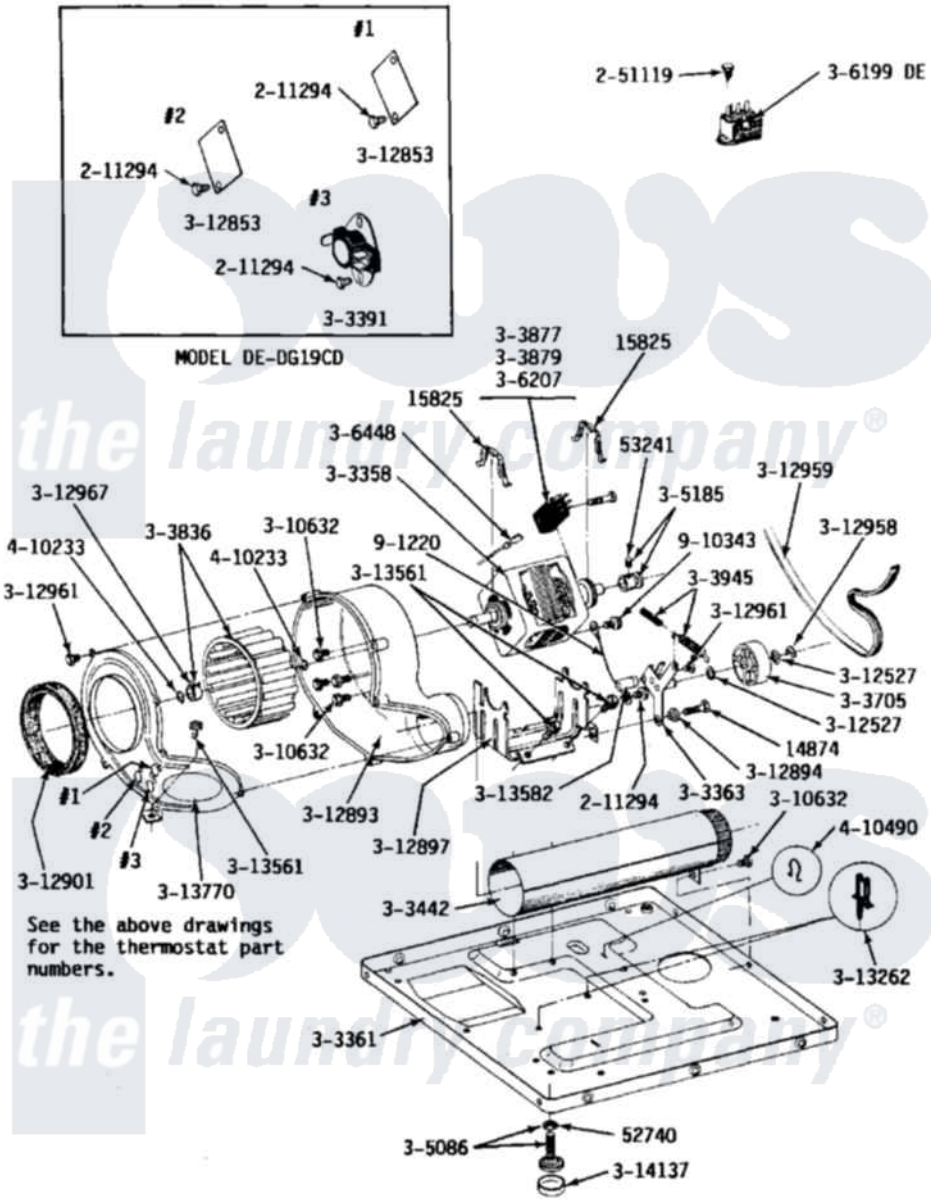

Maytag Residential Maytag DG19CD Dryer Parts Parts Diagram 07 - MOTOR, BLOWER, BASE FRAME & THERMOSTATS
Click on the part number to view part

Item	Original Part Number	Replaced By	Status	Part Description
001	Y014874			Screw, Idler Arm And Sleeve
002	Y015825			Clip, Motor To Motor Support
003	Y052740	62739		Nut, Lock
004	Y053241			Set Screw, Motor Pulley
005	211294	90767		Screw, 8A X 3/8 HeX Washer Head Tapping
006	Y303358	W10410999		Motor-Drve
007	Y303361		Not Available	BASE ASSY. (UPPER & LOWER)
008	Y303363	6-3033630		Idler Arm
009	Y303391	33303391		Thermostat, Cycling
010	Y303442			EXHAUST DUCT ASSEMBLY
011	Y303705	6-3037050		Pulley- ID
012	Y303836			Blower Wheel Assembly And Clamp
013	Y303877		Not Available	SWITCH, MOTOR EXTERNAL START No.303358-2, No.303358-4, 303358-7

014	Y303879			Switch, Motor External Start
015	Y303945			IDLER SPRING ASSY. W/PLUG
016	Y305086			Adjustable Leg And Nut
017	Y305185	6-3051850		Pulley- MO
018	NLA		Not Available	SWITCH, MOTOR START-PROD.
019	NLA		Not Available	WIRE
021	Y251119	3177991		Screw
022	Y310632	1163839		Screw
023	Y312527			Washer, Idler Shaft
024	Y312853			Cover For Thermostat Openin
025	Y312893			Housing, Blower
026	Y312894	315772		Sleeve, Idler Arm
027	NLA		Not Available	SUPPORT, MOTOR
028	Y312901			Seal, Housing Cover
029	312958	354987		Ring, Retaining
030	Y312959			Poly "V" Belt For Tumbler
031	Y312961	W10116751		Screw
032	312967			Clamp, Blower Housing
033	Y313262	W10116752		Retainer-
034	Y313561			Screw----NA
035	Y313582	W10116756		Spacer
036	Y313770			COVER FOR BLOWER HOUSING
037	Y314137			Foot, Rubber
038	410233	9703438		Ring-Retnr
039	410490			Spring, Retainer Wire Harness
040	901220			Ground Wire
041	910343	488234		Screw 8-32 X 1/4

the laundry company®