Maytag DG23CD 07 - INLET DUCT, GAS VALVE, CONE & EXTENSION

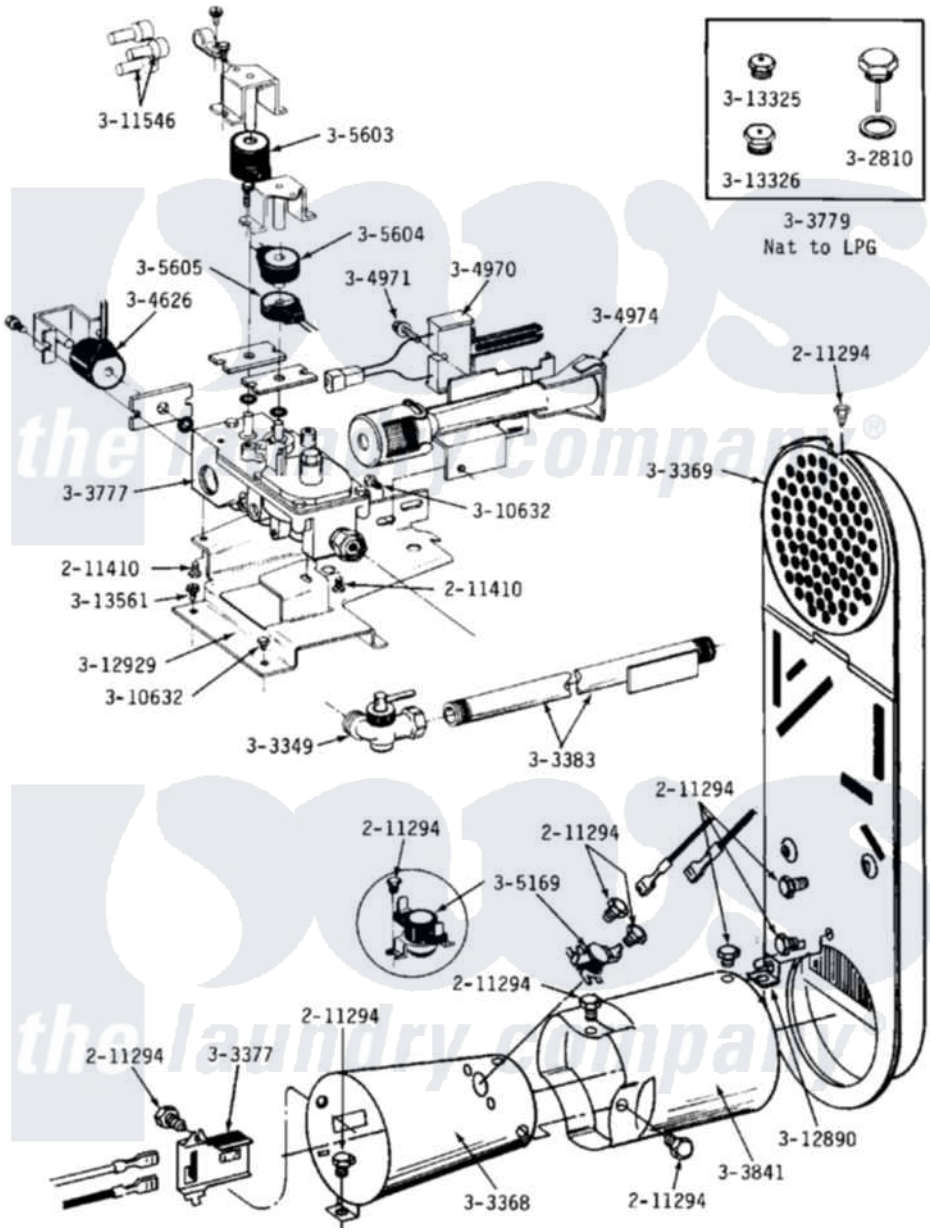

Maytag Residential Maytag DG23CD Dryer Parts Parts Diagram 07 - INLET DUCT, GAS VALVE, CONE & EXTENSION
Click on the part number to view part

Item	Original Part Number	Replaced By	Status	Part Description
001	211294	90767		Screw, 8A X 3/8 HeX Washer Head Tapping
002	NLA		Not Available	SCREW, HEX HD No.8 X 3/8 INCH
003	NLA		Not Available	SCREW ASSM - BLUE BLOCK OPE
004	Y303349			Angle Shut-Off, Gas Valve
005	Y303368			Cone, Combustion
006	Y303369			Inlet Duct Assembly
007	Y303377	338906		Radiant, Sensor
008	Y303383	33001735		Pipe And Bracket Assembly Series 18 Not Needed Use Vavle
009	Y303777	W10116794		Gas Valve
010	Y303779			Conversion Kit
"	Y304672			Conversion Kit-LPG To Nat.
011	Y303841			Cone, Extension
012	Y304626			Side Coil

013	304970	4391996		Ignitor
014	304971			Screw Note: Screw, Igniter
015	304974	33002793		Burner Assembly
016	305169			Thermostat, Hi-Limit Gas
017	305603			Secondary Coil
018	305604			Holding Coil
019	305605			Booster Coil
020	NLA		Not Available	ORIFICE KIT, NAT (HIGH ALT.)
021	NLA		Not Available	ORIFICE KIT, LP (HIGH ALT.)
022	Y310632	1163839		Screw
023	311546	911445		Wire Connector
024	Y312890			Retainer, Heater Chamber
025	312929			Gas Valve Bracket
026	NLA		Not Available	MAIN BURNER ORIFICE - LPG
027	NLA		Not Available	INTERNAL ORIFICE - LPG
028	NLA		Not Available	MAIN BURNER ORIFICE (MFG)
029	Y313561			Screw----NA

the laundry company®