Maytag DG9700 04 - INLET DUCT, GAS VALVE & COMBUSTION CONE

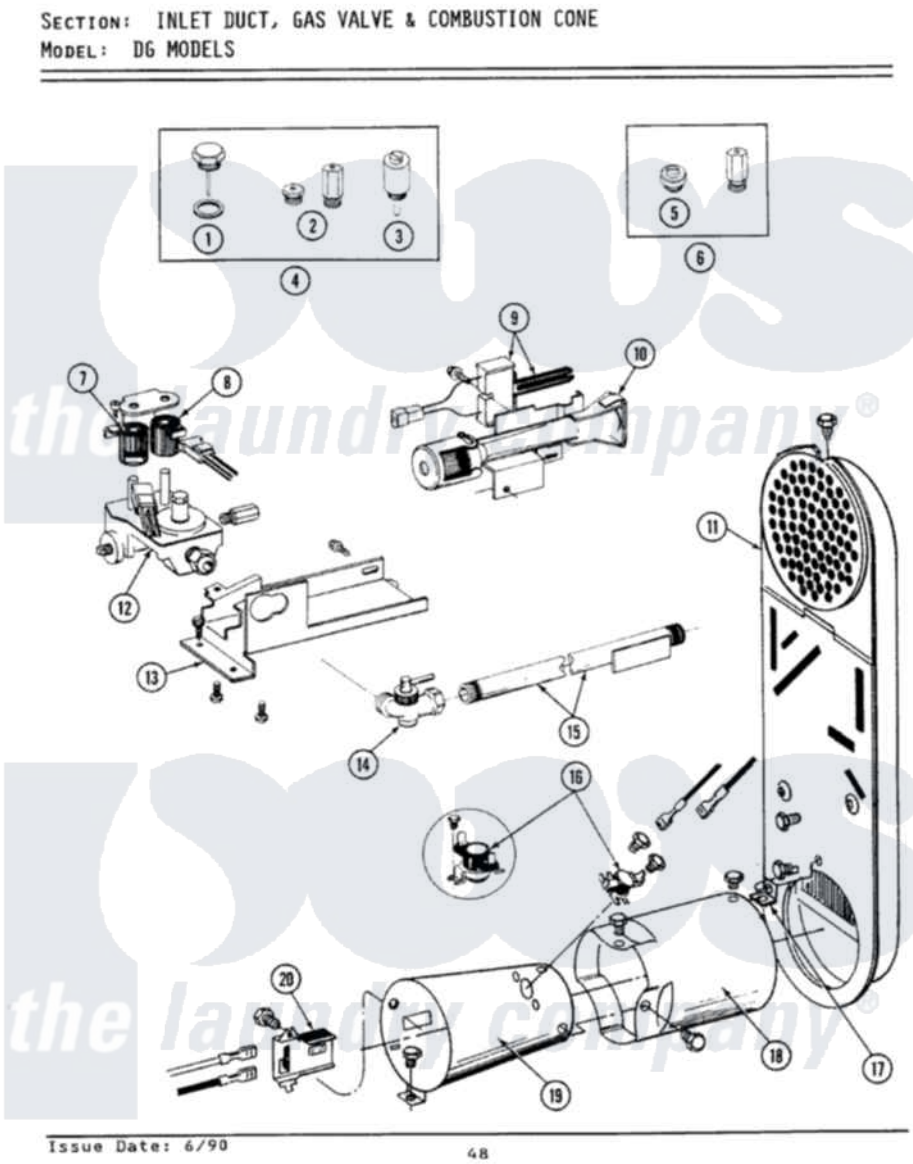

Maytag Residential Maytag DG9700 Dryer Parts Parts Diagram 04 - INLET DUCT, GAS VALVE & COMBUSTION CONE
Click on the part number to view part

Item	Original Part Number	Replaced By	Status	Part Description
1	302810			Screw Assembly - Blue Block Ope
2	305861		Not Available	MAIN BURNER ORIFICE KIT-LPG
3	306184		Not Available	PLUG, BLOCKING (LPG REGULATOR)
4	Y306195	MAL9000AXX		LP Gas Con
5	314602	694424		Leak, Limiter
6	306204	33002924		Gas Conv K
7	306106			Coil, Holding And Booster--W
8	306105	694540		Coil, 60 Hz
9	304971			Screw Note: Screw, Igniter
"	304970	4391996		Ignitor
10	Y310632	1163839		Screw
"	304974	33002793		Burner Assembly
11	307119			Duct, Inlet Assembly
"	211294	90767		Screw, 8A X 3/8 HeX Washer

	211294	90767	Head Tapping
12	211410		Screw, HeX Head No.8 X 3/8 Inch
"	314082	90767	Screw, 8A X 3/8 HeX Washer Head Tapping
"	306176		Valve, Gas
13	Y310632	1163839	Screw
"	Y313561		Screw----NA
"	314566		Gas Control Bracket
14	Y303349		Angle Shut-Off, Gas Valve
15	Y303383	33001735	Pipe And Bracket Assembly Series 18 Not Needed Use Vavle
16	211294	90767	Screw, 8A X 3/8 HeX Washer Head Tapping
"	303395		Thermostat, Hi-Limit
17	211294	90767	Screw, 8A X 3/8 HeX Washer Head Tapping
"	Y312890		Retainer, Heater Chamber
18	Y303841		Cone, Extension
19	211294	90767	Screw, 8A X 3/8 HeX Washer Head Tapping
"	Y303368		Cone, Combustion
"	Y308548		Combustion Cone Assembly
20	211294	90767	Screw, 8A X 3/8 HeX Washer Head Tapping
"	Y303377	338906	Radiant, Sensor

the laundry company®