Maytag ESG9900 17 - TUB (ESE9900 & ESG9900)

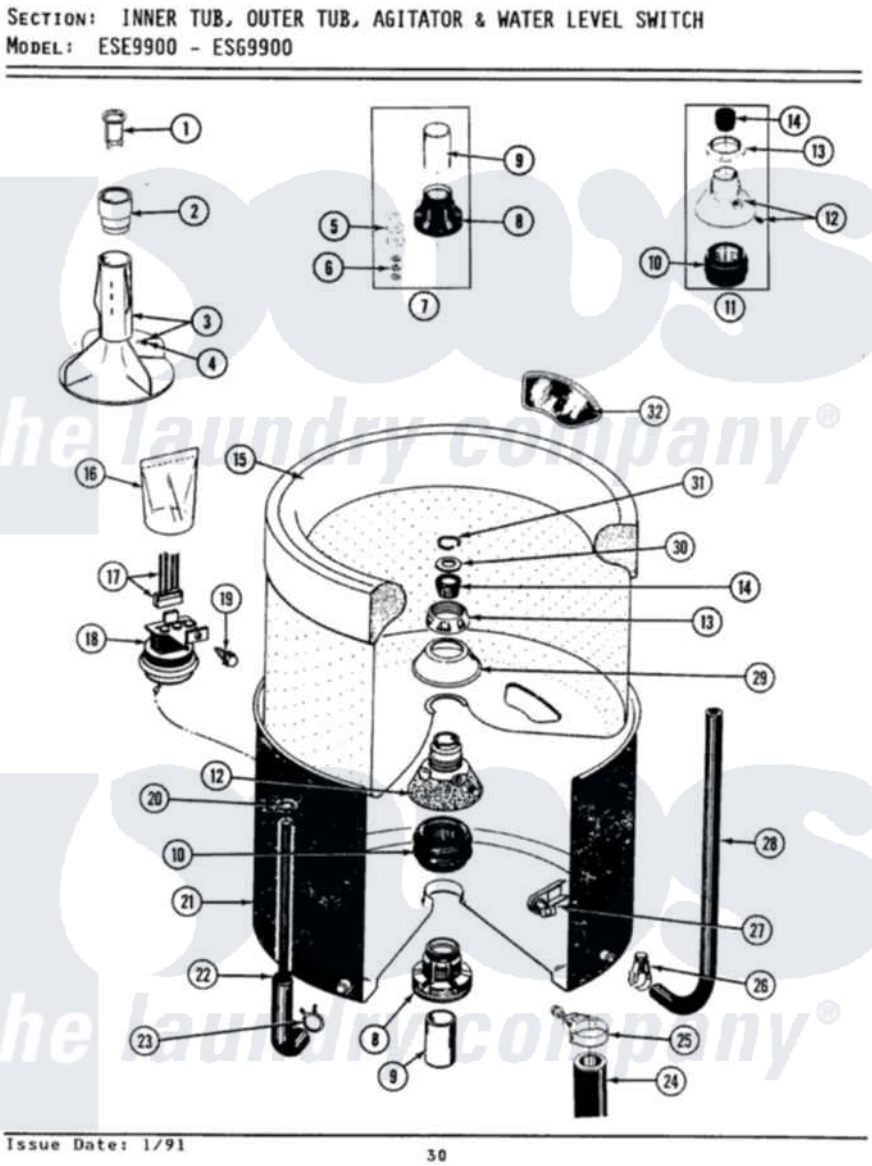

Maytag Residential Maytag ESG9900 Stacked Washer and Dryer Parts Parts Diagram 17 - TUB (ESE9900 & ESG9900)
Click on the part number to view part

Item	Original Part Number	Replaced By	Status	Part Description
1	215733			Dispensing Cup
2	215721			Dispensing Cap
3	207538			Agitator W/Lock Screw
4	206478		Not Available	SCREW & WASHER FOR AGITATOR
5	211100			Washer, Outer Tub
6	Y054867			Washer, Lock
7	204013	6-2040130		Tub Bearin
8	200824	6-2040130		Tub Bearin
9	211130			Bearing Liner, Tub Bearing
10	201537	6-2095720		Mounting S
11	204012	6-2095720		Mounting S
12	202521	6-2095720		Mounting S
13	211047	6-2110472		Nut- Clamp
14	Y0A4298	6-0A57420		Seal- Agitator
15	207830		Not Available	INNER TUB W/PLUG
16	215081			Poly Bag

17	206849		D.C. Wire Harness
18	206418		Water Level Switch-Digital
19	Y313559		Screw
20	410296	596669	Clamp, Manifold
21	206405		Outer Tub
22	215258	22001616	Tube, Air
23	211641		Clamp, 1-1/16"
24	213045		Hose, Outer Tub Part Not Used
25	200900	616099	Clamp
26	205161	489503	Clamp
27	214434		Spout, Deflector
28	214495		Tube, Inlet To Tub
29	211210		Washer, Clamping Nut
30	Y015666		Washer, Retaining -
31	Y015667		Retaining Ring
32	207219		Filter, Self-Cleaning

the laundry company®
the laundry company®
the laundry company®