Maytag GDG19CS 10 - GAS VALVE

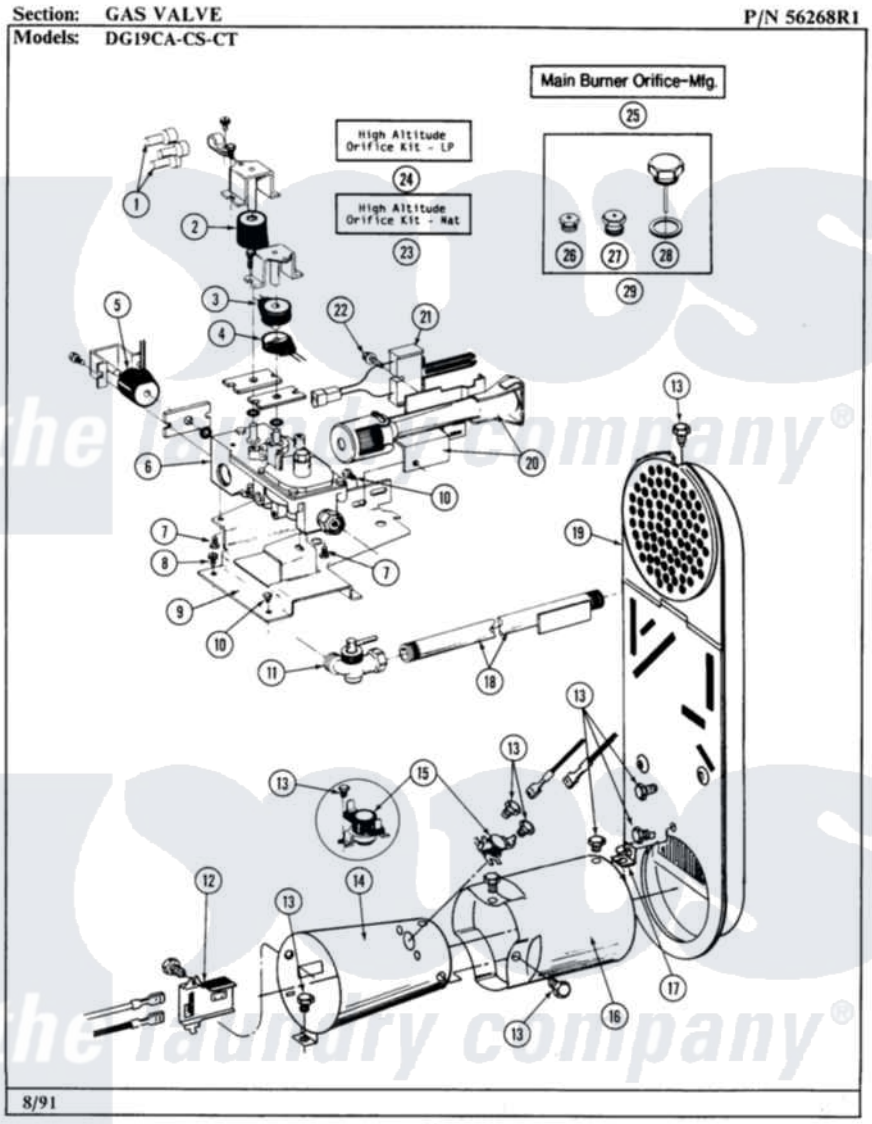

Maytag Residential Maytag GDG19CS Dryer Parts Parts Diagram 10 - GAS VALVE
Click on the part number to view part

Item	Original Part Number	Replaced By	Status	Part Description
001	311546	911445		Wire Connector
002	305603			Secondary Coil
003	305604			Holding Coil
004	305605			Booster Coil
005	Y304626			Side Coil
006	Y303777	W10116794		Gas Valve
007	NLA		Not Available	SCREW, HEX HD No.8 X 3/8 INCH
008	Y313561			Screw----NA
009	312929			Gas Valve Bracket
010	Y310632	1163839		Screw
011	Y303349			Angle Shut-Off, Gas Valve
012	Y303377	338906		Radiant, Sensor
013	211294	90767		Screw, 8A X 3/8 HeX Washer Head Tapping
014	Y303368			Cone, Combustion
015	305169			Thermostat, Hi-Limit Gas

016	Y303841			Cone, Extension
017	Y312890			Retainer, Heater Chamber
018	Y303383	33001735		Pipe And Bracket Assembly Series 18 Not Needed Use Vavle
019	211294	90767		Screw, 8A X 3/8 HeX Washer Head Tapping
"	Y303369			Inlet Duct Assembly
020	304974	33002793		Burner Assembly
"	Y310632	1163839		Screw
021	304970	4391996		Ignitor
022	304971			Screw Note: Screw, Igniter
023	NLA		Not Available	ORIFICE KIT, LP (HIGH ALT.)
024	NLA		Not Available	ORIFICE KIT, NAT (HIGH ALT.)
025	NLA		Not Available	MAIN BURNER ORIFICE (MFG)
026	NLA		Not Available	MAIN BURNER ORIFICE - LPG
027	NLA		Not Available	INTERNAL ORIFICE - LPG
028	NLA		Not Available	SCREW ASSM - BLUE BLOCK OPE
029	Y303779			Conversion Kit

the laundry company®
the laundry company®