Maytag LAT1000AJE 05 - TRANSMISSION, DUAL DRIVE

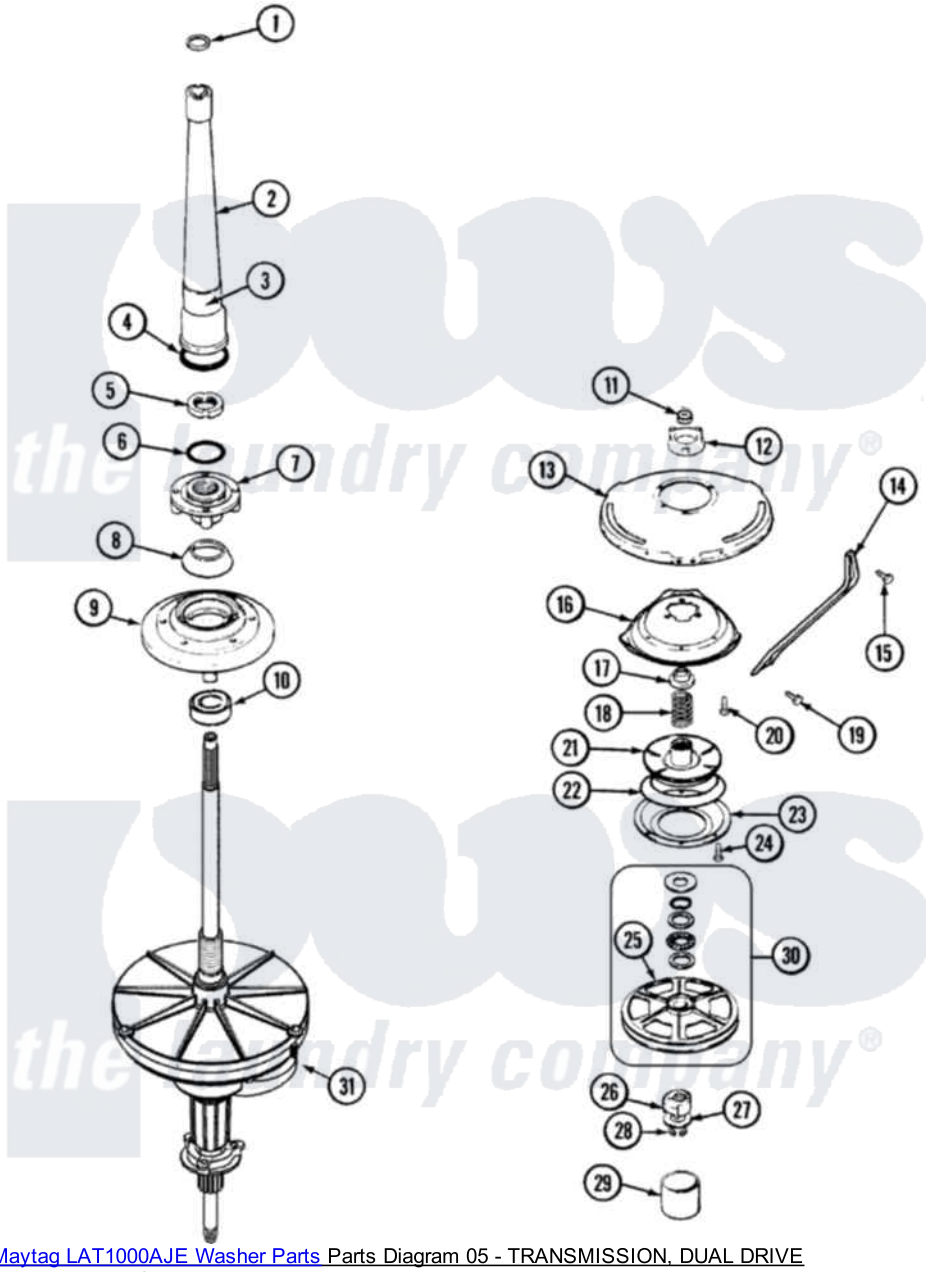

Maytag Residential Maytag LAT1000AJE Washer Parts Parts Diagram 05 - TRANSMISSION, DUAL DRIVE
Click on the part number to view part

Item	Original Part Number	Replaced By	Status	Part Description
1	25-7941			"O" Ring, Agtr Drive Shaft
2	35-2792	21001401		Center Pos
3	33-6790			Bearing, Agitator
"	35-2983		Not Available	CENTERPOST ASSY.
4	35-2906			Seal, Centerpost Bottom
5	35-2791			Nut, Spin Tube
6	25-7938			"O" Ring, Basket Drive Hub
7	35-3647	W10219156		Tub Seal
8	35-2974			Tub Seal/Hub Assembly
9	35-2716	12001561		Bearing And Seal Housing Assembly
10	35-2205			Bearing, Spin
11	35-2010	207843		Lip Seal Repair Kit
12	35-2973	35-6680		Transmission
"	35-2730	12001562		Bearing Assembly
13	21001162	21001518		Support, Tub
14	21001164		Not Available	BRACE, TUB

15	25-7895	21001858	Screw 5/16-18 x 1/2
16	21001163		Housing, Suspension
17	35-2017		Retainer, Brake Spring
18	35-2112	21001910	Spring, Brake
19	25-7930	21001858	Screw 5/16-18 x 1/2
20	25-7895	21001858	Screw 5/16-18 x 1/2
21	35-2948	35-6714	Brake Roto
22	21001161	21002026	Snubber
23	35-2018	35-6918	Stator, Brake
24	21001065		Screw, No.10-24 x .50 Hxnibhd
25	35-3829	12002213	Thrust Bearing Kit
26	LA-2007	12002213	Thrust Bearing Kit
27	35-2082		Washer, 1.25ODX.530IDX.062
"	35-2132		Washer, 1.25ODX.530IDX.032
28	25-7854		Ring, Retaining
29	35-2007		Cap, Dust
30	12500036	12002213	Thrust Bearing Kit
31	21001394	35-6680	Transmission

the laundry company®
the laundry company®