Maytag LAT2916ABE 05 - TOP

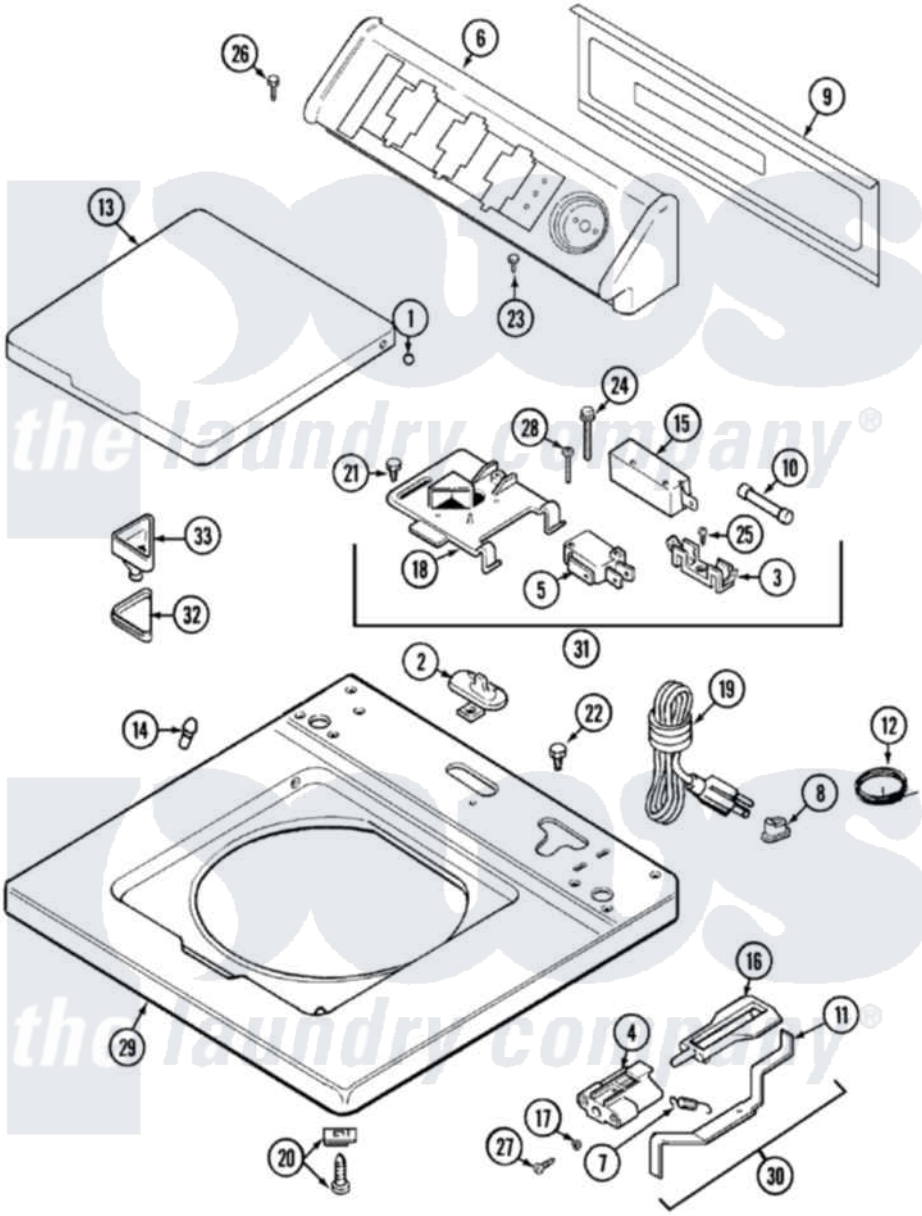

Maytag Residential Maytag LAT2916ABE Washer Parts Parts Diagram 05 - TOP
Click on the part number to view part

Item	Original Part Number	Replaced By	Status	Part Description
1	211726			Hinge, Ball Lid
2	207159	489355		Screw, 8 X 1/2
"	22001298			Cap, Top Cover
3	207167			Block, Fuse
4	22001645		Not Available	BRACKET, UNBALANCE----NA
5	207166			Switch, Check
6	22001670			Console
7	213720			Spring, Lid Switch
8	211881			Grommet, Cord Part Not Used-Gas Models Only
9	216423	3370225		Screw
"	22001662	8534058		Screw
"	22001814			Back Panel, Console
10	22001673	22001682		Switch Assembly, Lid W/4amp Fuse
11	22001672			Lever, Unbalance

12	22001654			Wire, Ground
"	Y705026	3370225		Screw
13	22001674	22001893		Lid
"	22001676	22001893		Lid
14	212716			Bumper, Lid
15	205415	279347		Switch-Lid
16	216255			Plunger, Lid Switch
17	211500			Washer, Bracket To Top Cover
18	22001678			Bracket, Switch And Fuse
19	208194	22003062		Cord, Power
20	22001402	214354		Screw, Top Cover To Cabnt.
21	207159	489355		Screw, 8 X 1/2
22	Y705026	3370225		Screw
23	216423	3370225		Screw
24	213501			Screw, No.6-20 X 1-1/8 Inch
25	Y311711			Screw, Fuse Block
26	216423	3370225		Screw
27	22001600	25-7809		Screw, No.6-20 1/2 Flthd Torx
28	22001352			Screw, Check Switch
29	22001781	22002145		Cover Assembly, Top
30	22001681			Unbalance Lever Assembly
31	22001682			Switch Assembly, Lid W/4amp Fuse
32	215374		Not Available	GASKET FOR BLEACH CUP
33	22001006			Cup, Bleach

the laundry company®