Maytag LAT7500AAW 03 - CLUTCH, BRAKE & BELTS

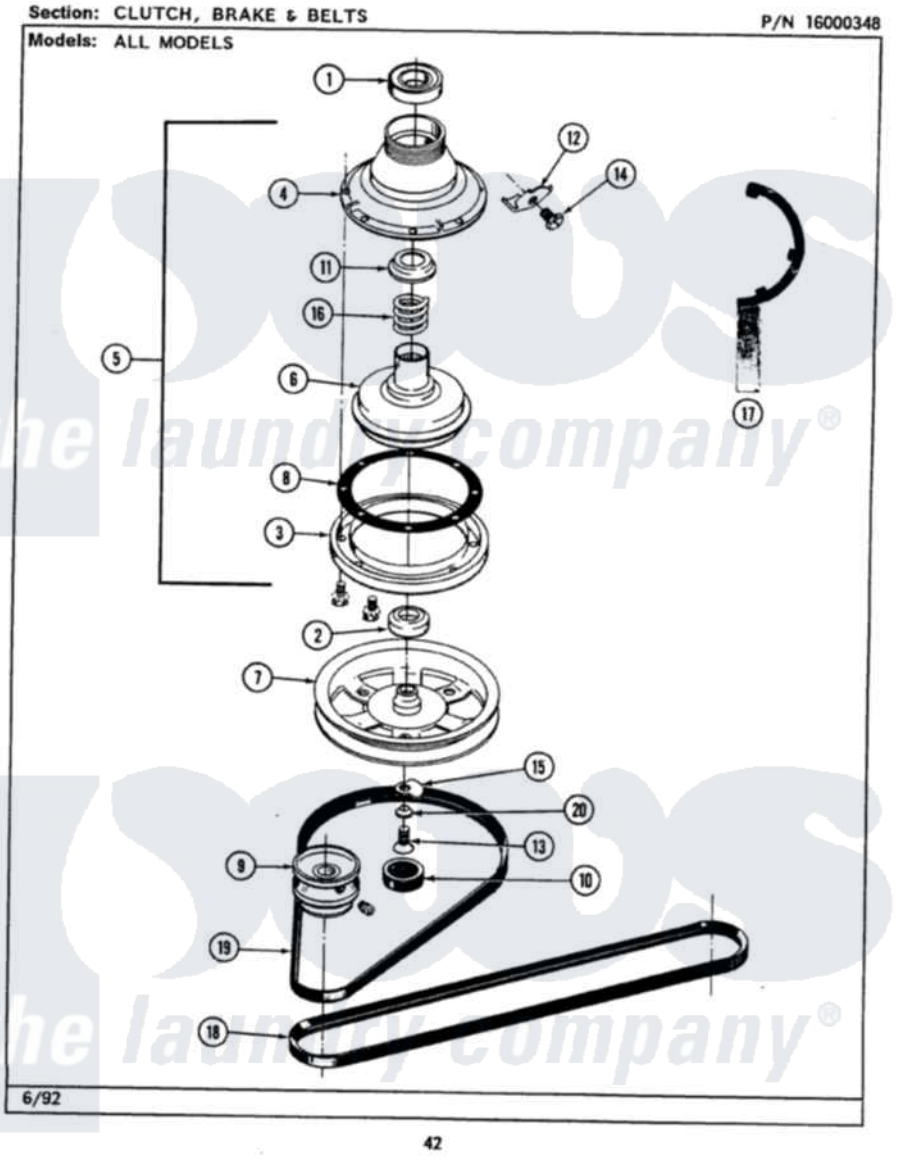

Maytag Residential Maytag LAT7500AAW Washer Parts Parts Diagram 03 - CLUTCH, BRAKE & BELTS
Click on the part number to view part

Item	Original Part Number	Replaced By	Status	Part Description
1	Y200720	22003441		Bearing, Rear
2	200835			Bearing, Brake Rotor
3	211043	6-2011900		Brake Asse
"	211000			SCREW, BRAKE DRUM (HEX HEAD)
4	211045	6-2011900		Brake Asse
5	201190	6-2011900		Brake Asse
6	201126	6-2011900		Brake Asse
7	211059	6-2301530		Pulley
8	211042	6-2011900		Brake Asse
9	Y053241			Set Screw, Motor Pulley
"	200816	6-2008160		Pulley- MO
10	211038		Not Available	CAP, OIL RETAINER
11	211039	6-2011900		Brake Asse
12	213325			Clip, Retaining
13	211375	681582		Screw
14	213326			Bolt, Sems Retaining Clip

15	211089		Lug, Stop Pulley
16	211041	6-2011900	Brake Asse
17	Y038315	038315	Tool
18	211124		Part Not Used
19	211125		V Belt, DriVe Pulley
20	211090	22003555	Washer, Stop Lug

the laundry company®
the laundry company®
the laundry company®