Maytag LAT8016AAE 04 - CONTROL PANEL

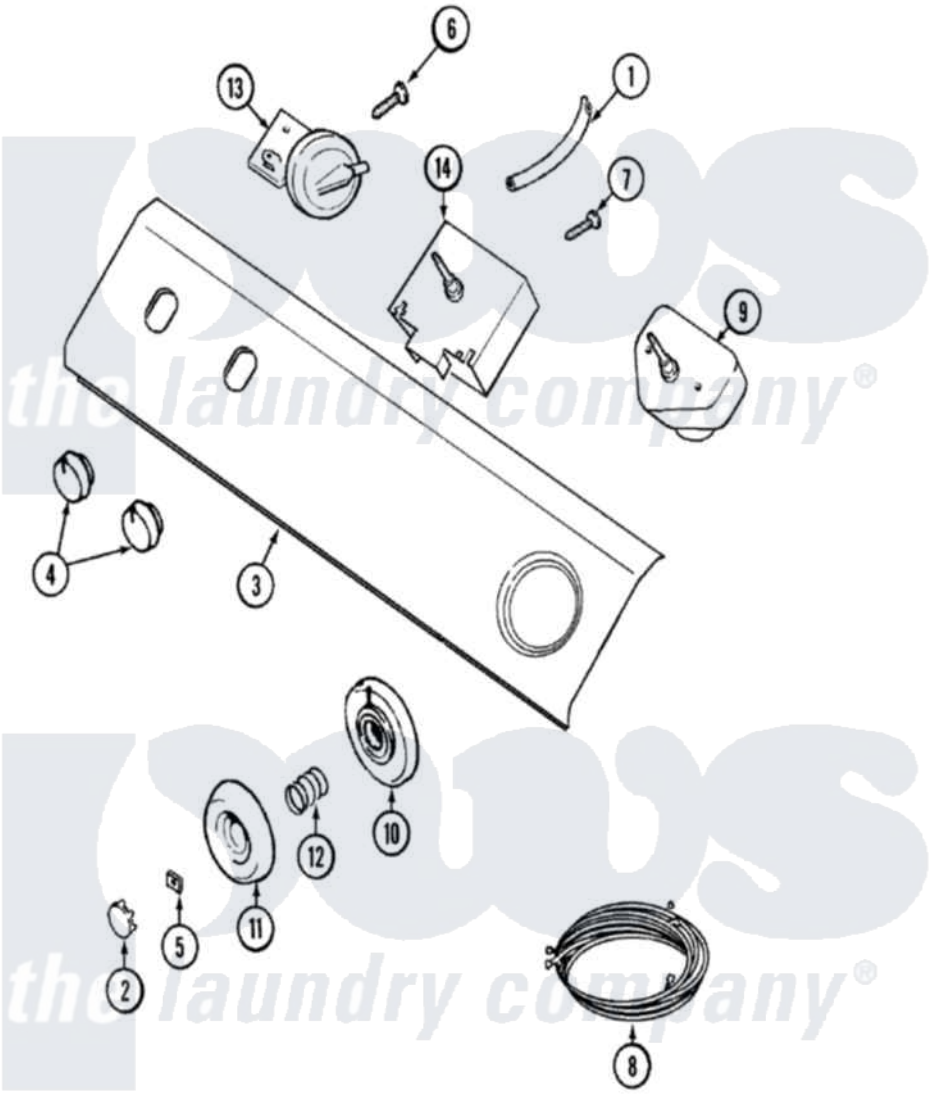

Maytag Residential Maytag LAT8016AAE Washer Parts Parts Diagram 04 - CONTROL PANEL
Click on the part number to view part

Item	Original Part Number	Replaced By	Status	Part Description
1	22001036	22001619		Tube, Water Level Switch
2	22001664			Timer Knob Insert/Cap
3	22001698			Panel, Control
4	22001663			Knob, Selector Switch
5	211605			Bezel, Timer Dial
6	22001662	8534058		Screw
7	22001661	3400094		Screw, 10-32 X 3/8
8	22002204		Not Available	HARNESS, WIRE
"	22001653			Wire Harness, Main
9	22002181			Timer
"	22001686			Timer
10	22001660			Dial Skirt - White
11	22001659			Timer Knob - Grey
12	211065			Spring, Index Wheel
13	22001775			4 Level Rotary Pressure Switch
14	22001655			Switch, Water Temp.

15	22001658	Not Available	MANUAL, USE & CARE (FRNCH)
"	22001657	Not Available	MANUAL, USE & CARE

the laundry company®

the laundry company®

the laundry company®