Maytag LAT8100ABL 01 - BASE

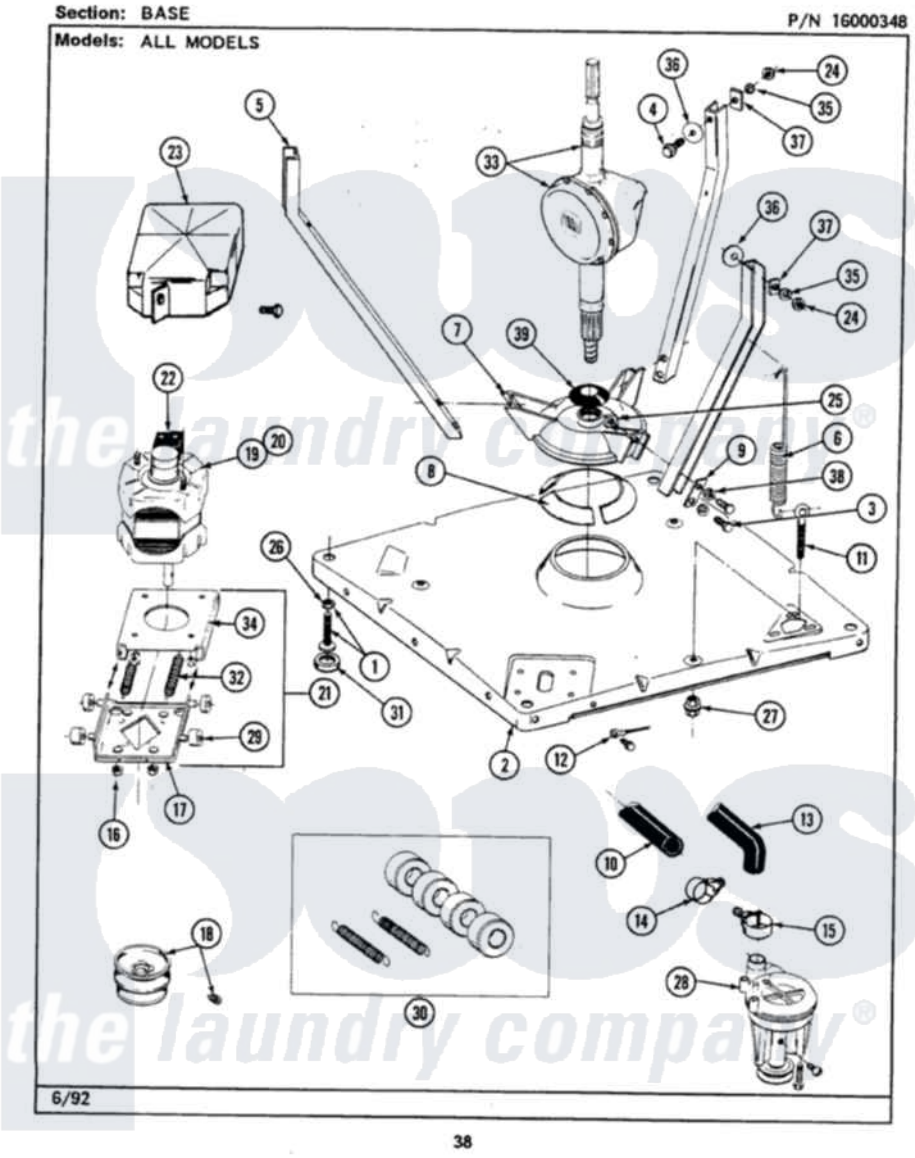

Maytag Residential Maytag LAT8100ABL Washer Parts Parts Diagram 01 - BASE
Click on the part number to view part

Item	Original Part Number	Replaced By	Status	Part Description
1	Y302699	22003428		Leg, Adjustable
2	203274			Base With Damper Pads
3	Y015627			Screw- Hex
4	205254	W10175938		Bolt
"	200744	W10175939		Bolt
5	213100		Not Available	PART NOT USED
6	213054			Centering Spring - 3 Used
7	203725			Damper W/Bolt And Clip
8	203956			Damper Pad Kit
9	213073			Washer, Double Brace
10	214767	22001448		Hose, Pump
11	213120	216416		Bolt, Eye/Centering Spring
12	210186	3370225		Screw
"	204807			Ground Wire, Supp. Plte To Top Cover
13	Y212989			Hose, Outer Tub To Pump
14	200461	285655		Clamp, Hose

15	202574	3367052		Clamp, Hose
16	Y311426	3400029		Nut, Adapter Plate
17	205908			Motor Mount Assembly
18	200816	6-2008160		Pulley- MO
"	Y053241			Set Screw, Motor Pulley
19	201805	12002351		Motor-Drve
21	205999			Motor Mount Assembly
22	205134		Not Available	MOTOR EXTERNAL START SWITCH
"	205131			Switch, Motor External Start
"	205133		Not Available	(PROD. IDNo. 2-1664-8 & 2-5463)
"	206504			Motor External Start Switch
"	206505		Not Available	PROD. No.201664-15, & No.205463-3.
"	205132		Not Available	SWITCH, MOTOR EXTERNAL START No.201664-14,205463-4 & 201800-4
23	213121	3400111		Screw, 12-14 X 5/8
"	215098			Shield, Motor
24	Y052734			Nut, Carrage Bolts And Bracket
25	Y052785			Nut, Brace To Damper
26	210385			Lock Nut For Adjustable Leg
27	211949			Nut, Adjustment Eyebolt
28	202203	6-2022030		Pump As Pa
"	211880			Screw, HeX Head No.10 X 1/2 Inc
"	Y015408	22003235		Screw, Bearing Insert
29	204998	205000		Roller And Spring Kit 4+Spr
30	205000			Roller And Spring Kit 4+Spr
31	210684			Foot, Adjustable Leg
32	202718			Springs, Tension
33	206708	6-2097790		Transmison
34	214956			Motor Mount Assembly
35	Y054867			Washer, Lock
36	211100			Washer, Outer Tub
37	212979		Not Available	WASHER, TUB BRACE
38	911852	486009		Lockwasher
39	211028	22001586		Deflector, Water

the laundry company®