Maytag LAT8100ABW 04 - CONTROL PANEL

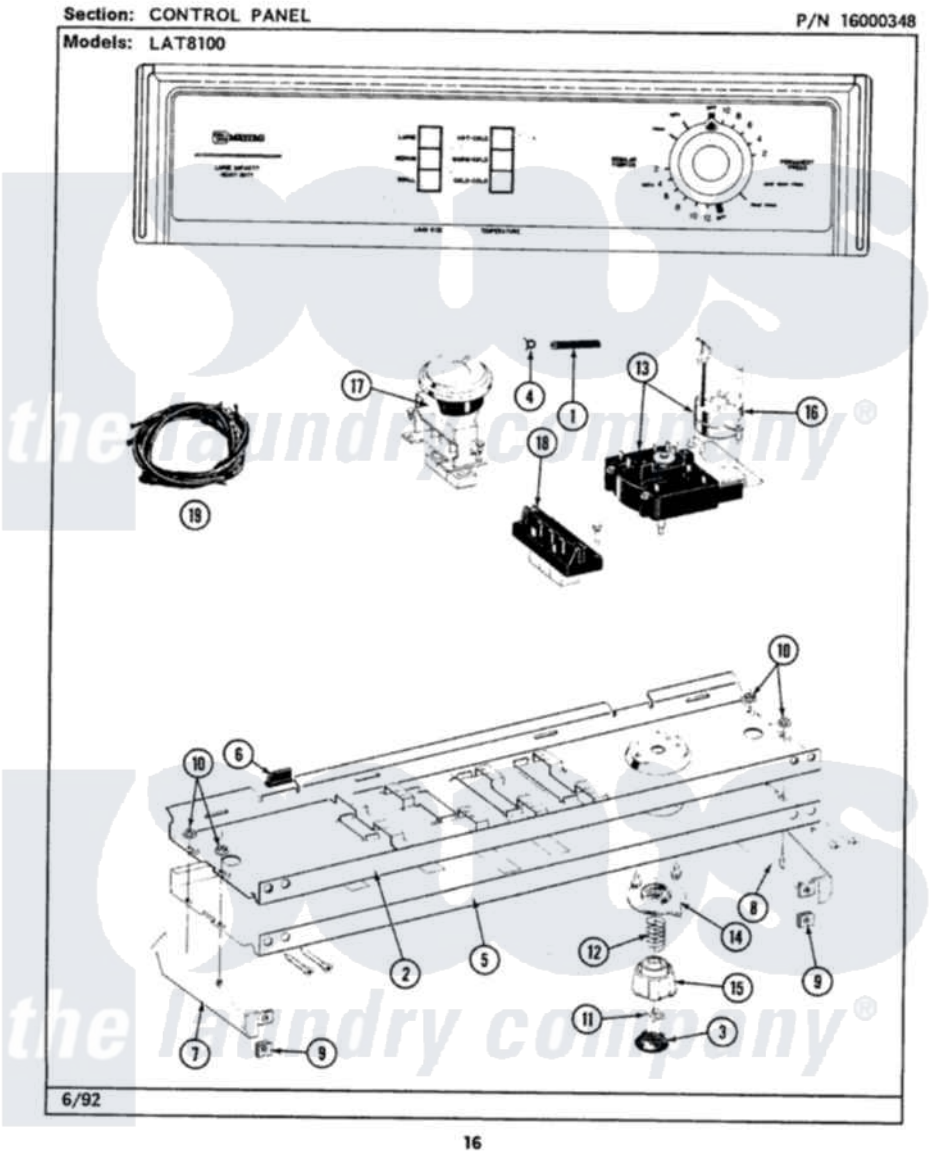

Maytag Residential Maytag LAT8100ABW Washer Parts Parts Diagram 04 - CONTROL PANEL
Click on the part number to view part

Item	Original Part Number	Replaced By	Status	Part Description
1	212942	22001619		Tube, Water Level Switch
2	214818			Back Up Plate
"	210932			Screw, No.8 X 9/16 Ctsk Note: Screw, Inlet Duct
3	215821		Not Available	CAP, KNOB
4	410296	596669		Clamp, Manifold
5	207606		Not Available	CONTROL PANEL
"	210932			Screw, No.8 X 9/16 Ctsk Note: Screw, Inlet Duct
6	214897			Pad, Control Panel
7	207215		Not Available	END CAP LH
8	207216		Not Available	END CAP RH
9	214894			Fastener, End Cap
10	214872			Palnut, End Cap Note: Nut, Lamp Holder
11	211605			Bezel, Timer Dial
12	211065			Spring, Index Wheel

13	213966	3400014		Screw
"	207379			Timer
14	215827		Not Available	TIMER DIAL SKIRT
15	215828			Knob, Timer
16	205033	22205033		Motor- Tim
17	207363		Not Available	3 LEVEL PRESSURE SWITCH
"	211168	W10139210		Screw, 8-18 X 5/16
18	213117	67006908		Screw, Ice Rack
"	207368		Not Available	TEMP CONTROL SWITCH - 3 BUTTON
19	207383			Wire Harness

the laundry company®
the laundry company®
the laundry company®