Maytag LAT8340AAW 05 - TOP

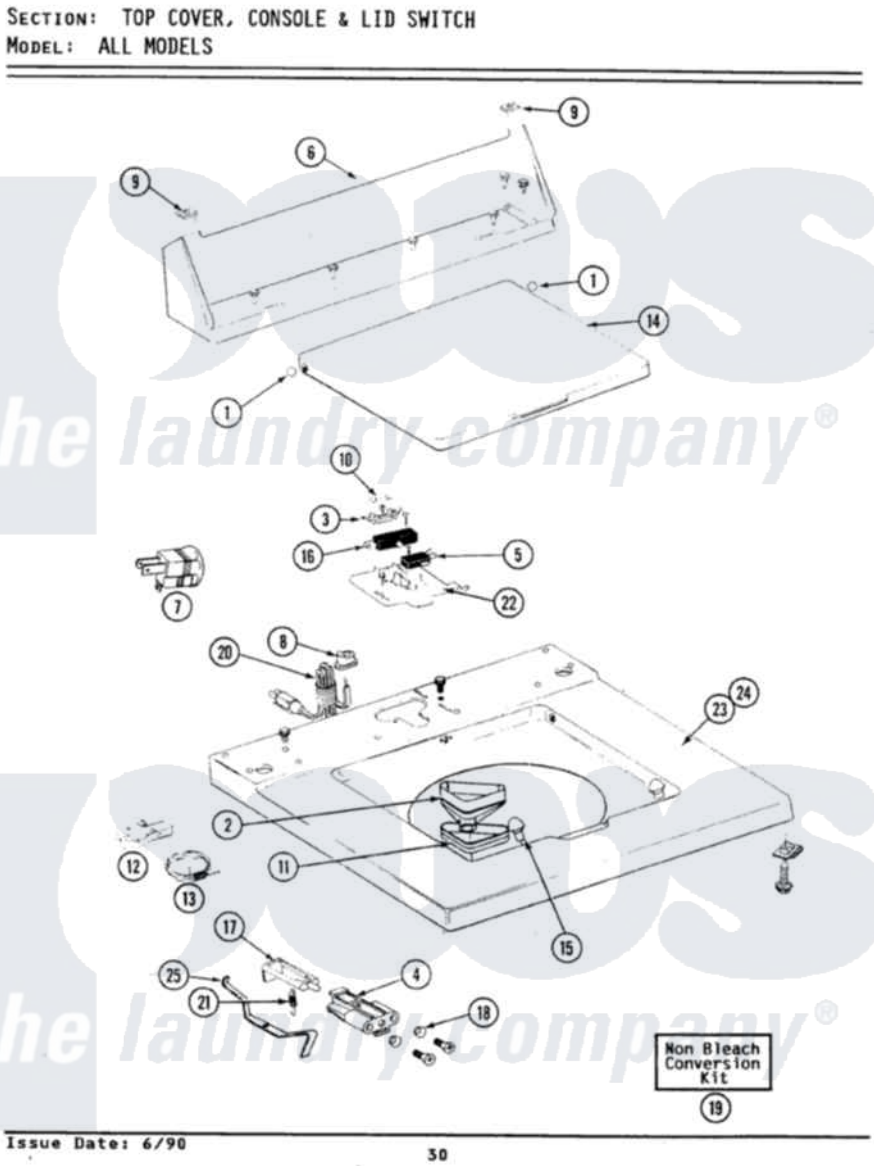

Maytag Residential Maytag LAT8340AAW Washer Parts Parts Diagram 05 - TOP
Click on the part number to view part

Item	Original Part Number	Replaced By	Status	Part Description
1	211726			Hinge, Ball Lid
2	215577			Bleach Inlet White
3	207167			Block, Fuse
"	215705	Y311711		Screw, Fuse Block
4	910182	25-7809		Screw, No.6-20 1/2 Flthd Torx
"	214279	204968		Plunger And Bracket Assembly--W
5	207166			Switch, Check
"	22001352			Screw, Check Switch
6	205635			Console
"	211294	90767		Screw, 8A X 3/8 HeX Washer Head Tapping
"	Y313559			Screw
7	Y201808			Converter
8	211881			Grommet, Cord Part Not Used-Gas Models Only
9	215075			Fastener, Control Panel To Console

10	207168	22001682		Switch Assembly, Lid W/4amp Fuse
11	214436			Gasket
12	301548			Clamp, Ground Wire
13	311155			Ground Wire And Clamp
14	216073			LID (WHITE)
15	212716			Bumper, Lid
16	205415	279347		Switch-Lid
"	213501			Screw, No.6-20 X 1-1/8 Inch
17	215700		Not Available	LID SWITCH PLUNGER
18	211500			Washer, Bracket To Top Cover
19	205997			Non-Bleach Conversion Kit
20	204590			Cord, Power
"	210186	3370225		Screw
21	213720			Spring, Lid Switch
22	207159	489355		Screw, 8 X 1/2
"	Y215699	22001678		Bracket, Switch And Fuse
23	210186	3370225		Screw
"	204445			Screw And Fastener Assembly
"	207170			Top Cover
24	210186	3370225		Screw
"	204445			Screw And Fastener Assembly
25	215704			Lever, Unbalance

the laundry company®