Maytag LAT8506ABE 05 - TOP

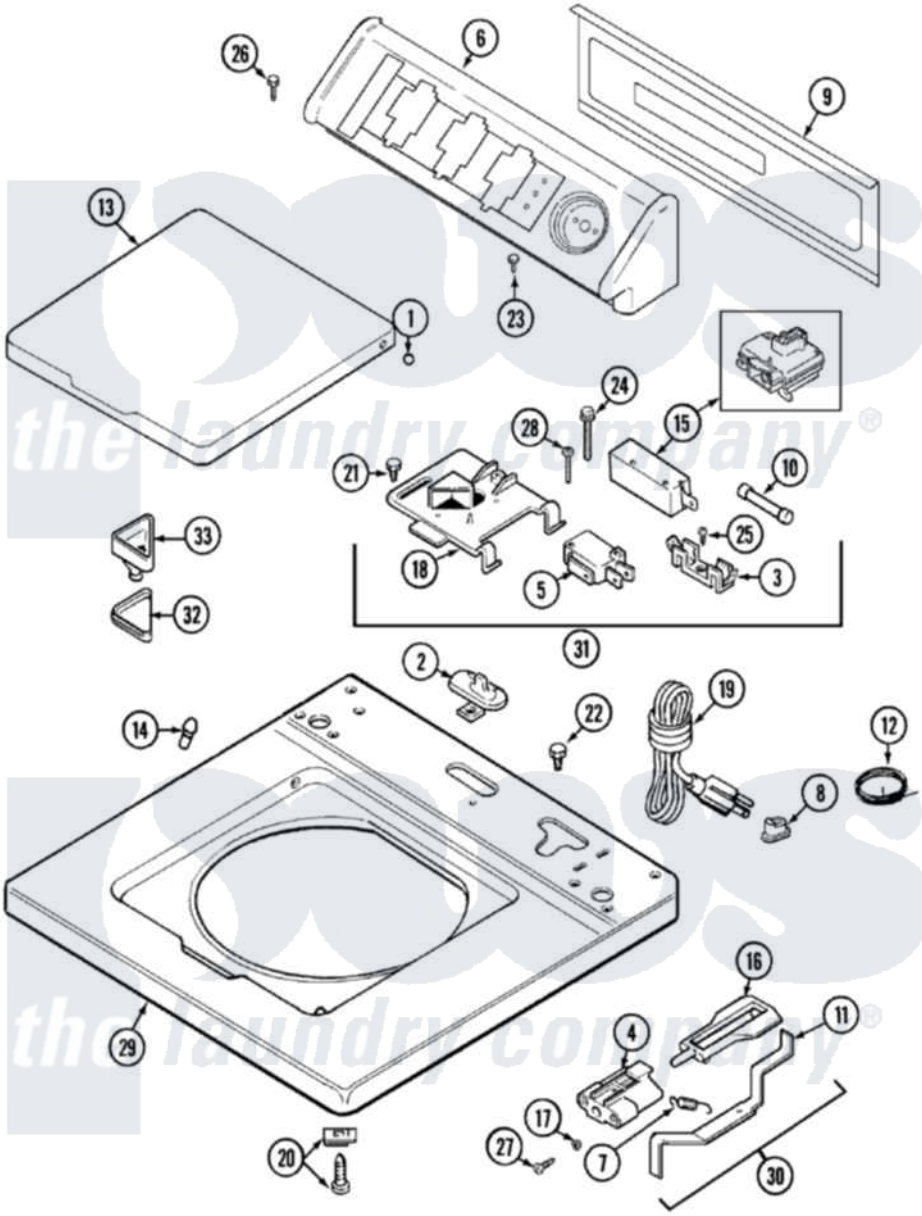

Maytag Residential Maytag LAT8506ABE Washer Parts Parts Diagram 05 - TOP
Click on the part number to view part

Item	Original Part Number	Replaced By	Status	Part Description
1	211726			Hinge, Ball Lid
2	22001298			Cap, Top Cover
"	207159	489355		Screw, 8 X 1/2
3	W10124350		Not Available	NOT REQUIRED PART OR SEE NOTE
4	22002135			Bracket, Unbalance
5	W10124350		Not Available	NOT REQUIRED PART OR SEE NOTE
6	22001670			Console
7	213720			Spring, Lid Switch
8	211881			Grommet, Cord Part Not Used-Gas Models Only
9	216423	3370225		Screw
"	22001662	8534058		Screw
"	22001814			Back Panel, Console
10	W10124350		Not Available	NOT REQUIRED PART OR SEE NOTE
11	22001968			Lever, Unbalance

12	22001654			Wire, Ground
"	Y705026	3370225		Screw
13	22001676	22001893		Lid
"	22001674	22001893		Lid
14	212716			Bumper, Lid
15	22001967	12001908		Switch-Lid
16	216255			Plunger, Lid Switch
17	211500			Washer, Bracket To Top Cover
18	W10124350		Not Available	NOT REQUIRED PART OR SEE NOTE
19	208194	22003062		Cord, Power
20	22001402	214354		Screw, Top Cover To Cabnt.
21	207159	489355		Screw, 8 X 1/2
22	Y705026	3370225		Screw
23	216423	3370225		Screw
24	213501			Screw, No.6-20 X 1-1/8 Inch
25	Y311711			Screw, Fuse Block
26	216423	3370225		Screw
27	22001600	25-7809		Screw, No.6-20 1/2 Flthd Torx
28	22001352			Screw, Check Switch
29	22001781	22002145		Cover Assembly, Top
30	22001969			Unbalance Lever Assembly
31	W10124350		Not Available	NOT REQUIRED PART OR SEE NOTE
32	215374		Not Available	GASKET FOR BLEACH CUP
33	22001006			Cup, Bleach

the laundry company®