Maytag LAT9356AAM 06 - TRANSMISSION

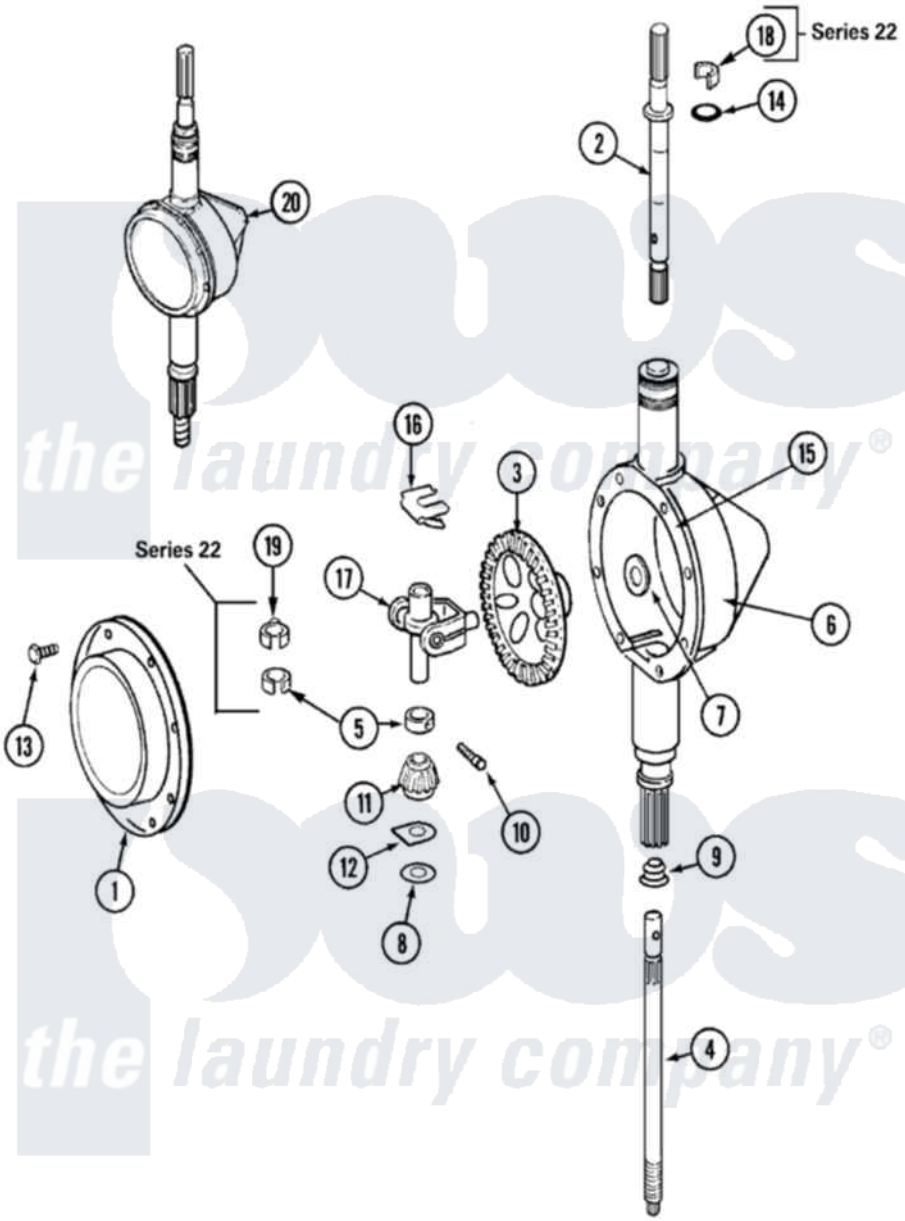

Maytag Residential Maytag LAT9356AAM Washer Parts Parts Diagram 06 - TRANSMISSION
Click on the part number to view part

Item	Original Part Number	Replaced By	Status	Part Description
1	206628			Cover, Transmission
2	22002415	6-2168983		Shaft- Agi
"	207153	6-2097820		Kit- Shaft
3	206713	6-2067130		Gear- Beve
4	22002342	6-2300050		Shaft- Cen
"	215410	12001450		Ctr Shaft W/Collar Andkeeper-Dp
5	22002353			Collar, Center Shaft
"	215415		Not Available	COLLAR, LOWER
6	22002416	6-2300100		Assembly-
"	206624	6-2097750		Trans Dee
7	215394			Washer, Bevel Gear
8	211483	6-2114830		Washer- SP
9	206602	207843		Lip Seal Repair Kit
10	215401	W10221114		Pinion
"	W10124350		Not Available	NOT REQUIRED PART OR SEE NOTE

11	215401	W10221114		Pinion
12	215395			Plate, Clutch
13	215417		Not Available	SCREW, TRANSMISSION COVER
"	215417		Not Available	SCREW, TRANSMISSION COVER
14	22002417			O-Ring AgitatOr Shaft
"	22002417			O-Ring AgitatOr Shaft
15	Y058700	675652		Adhesive
16	215581			Spring, Agitator Shaft
"	W10124350		Not Available	NOT REQUIRED PART OR SEE NOTE
17	206685	6-2066850		Yoke
18	22002340			Collar, Agitator Shaft
19	22002341			Collar, Lower Plastic Keeper
20	22002126	6-2097750		Trans Dee
"	206707	6-2097750		Trans Dee
21	20000021			Lip Seal Tool Kit

the laundry company®

the laundry company®